Winbond Electronics Corp.

32-Bit ARM7TDMI-based MCU

W90P710 Evaluation Board

Hardware Application Note

1 Revision history

version	date	page	description
A	FEB 06, 2006	-	Initial Issued
B	MAR 08, 2006	-	Update
C	July 20,2006	-	Add AUO TFT panel information

2 Over view

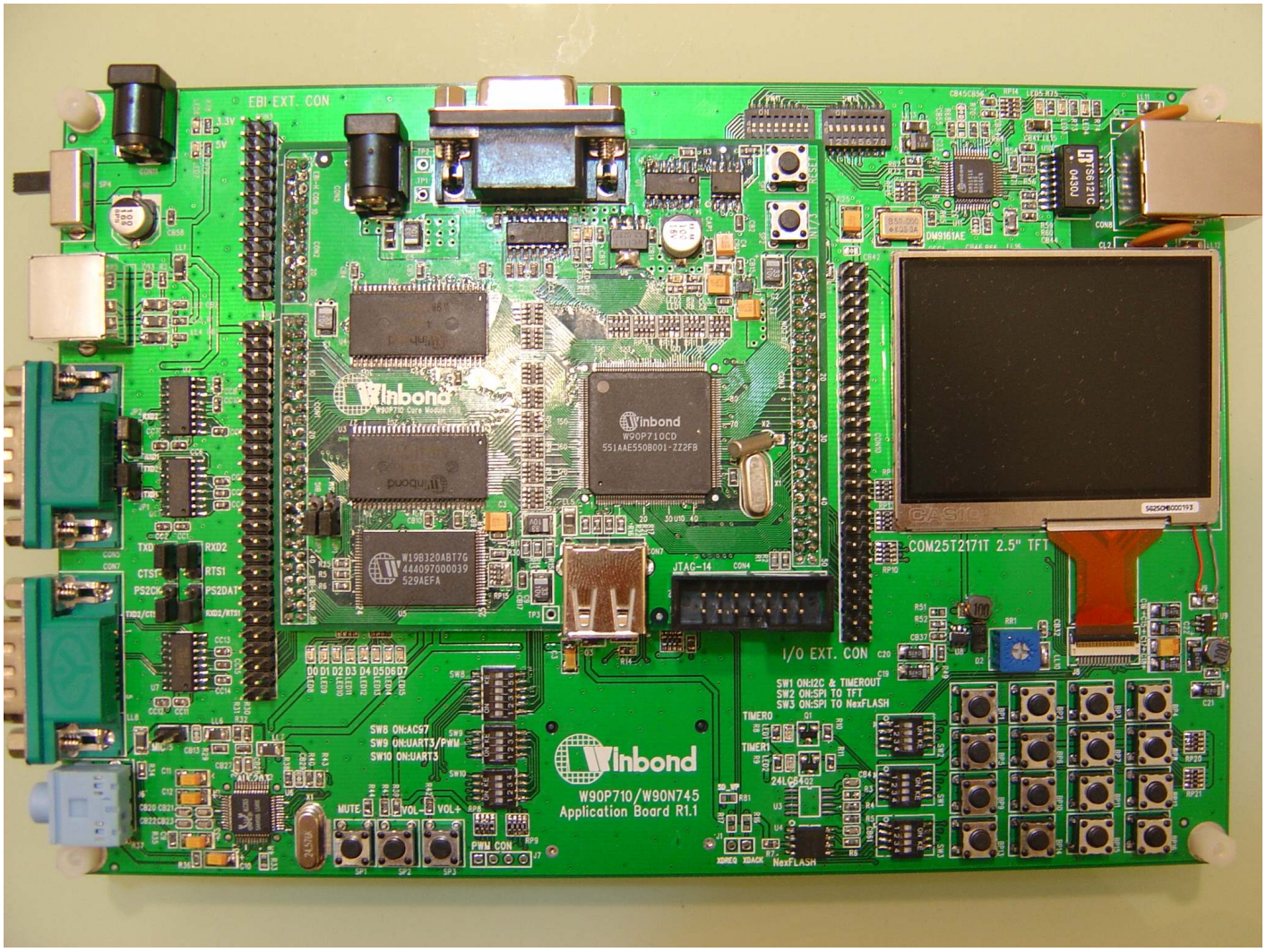

Picture 2-1

2.1 Features

The W90P710 evaluation board consists of a core module and an application board. The core module board consists of WINBOND ARM7-TDMI core MCU W90P710, 16MByte SDRAM, 4MByte NOR FLASH, one UART port for console communication and one USB 1.1 host and one USB 1.1 device port directly supported by W90P710.This core module offers the smallest system for evaluating W90P710. It's easily to build up user's application system by using this core module and the application board. For detail about this development system please see the following information:

W90P710 Core Module:

MCU: Winbond ARM7TDMI-based W90P710 operating up to 80MHz speed.
Boot FLASH: Board supports up to 8MB (4Mx16) FLASH, one 2MBx16 FLASH onboard.
SDRAM: Board supports up to 32MB (8Mx16x2 banks) SDRAM, totally 16MB onboard.
USB: One USB1.1 Host + one USB 1.1 device port connector.
UART: A TX/RX signals only UART port (UART0) for debug console communication.
JTAG: 14-pin header JTAG debug interface.

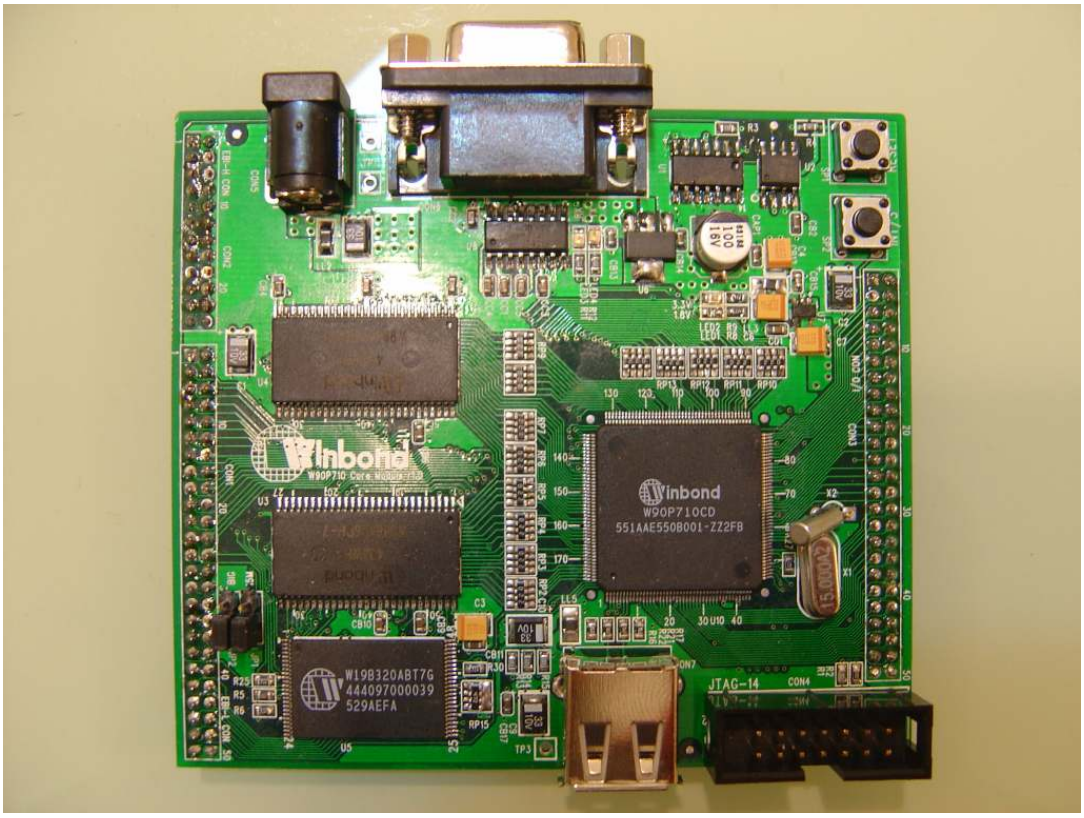

Picture 2-2

W90P710 Application Board:

Network: A 10/100Mbps Ethernet port supported with DM9161E by W90P710 RMII.
LCD: 1.Supports Casio 480x240 TFT LCD by W90P710's LCD controller interface.
2. Supports AUO 960x240 TFT LCD by W90P710's LCD controller interface.
SD: Supports 4-bit mode SD card interface by W90P710's SD interface
I2C: One 64kB EEPROM onboard connected with W90P710's I2C interface.
Smart card: Two 7816-3 ports supported by W90P710's SMC controller.
UART: Three UART ports supported (Male type) from W90P710.
PS/2: One PS/2 port supported by W90P710's PS/2 interface.
RTC: Real-time clock supported by W90P710's RTC controller.
Matrix Keypad: Supports 2-Row x 8-Col matrix keypad by W90P710's KPI.
SPI: One 32M-bit Serial FLASH connected with W90P710's SPI.
Audio: Audio-out/in supported with ALC-203 audio codec by W90P710's AC-97 interface.
LED debug display: 8-LED display connected with W90P710's EBI bank0.
PWM: 4-channel PWM connector supported by W90P710's PWM controller.
Timer out LED display: Two LED display connected with W90P710's timer out pins.

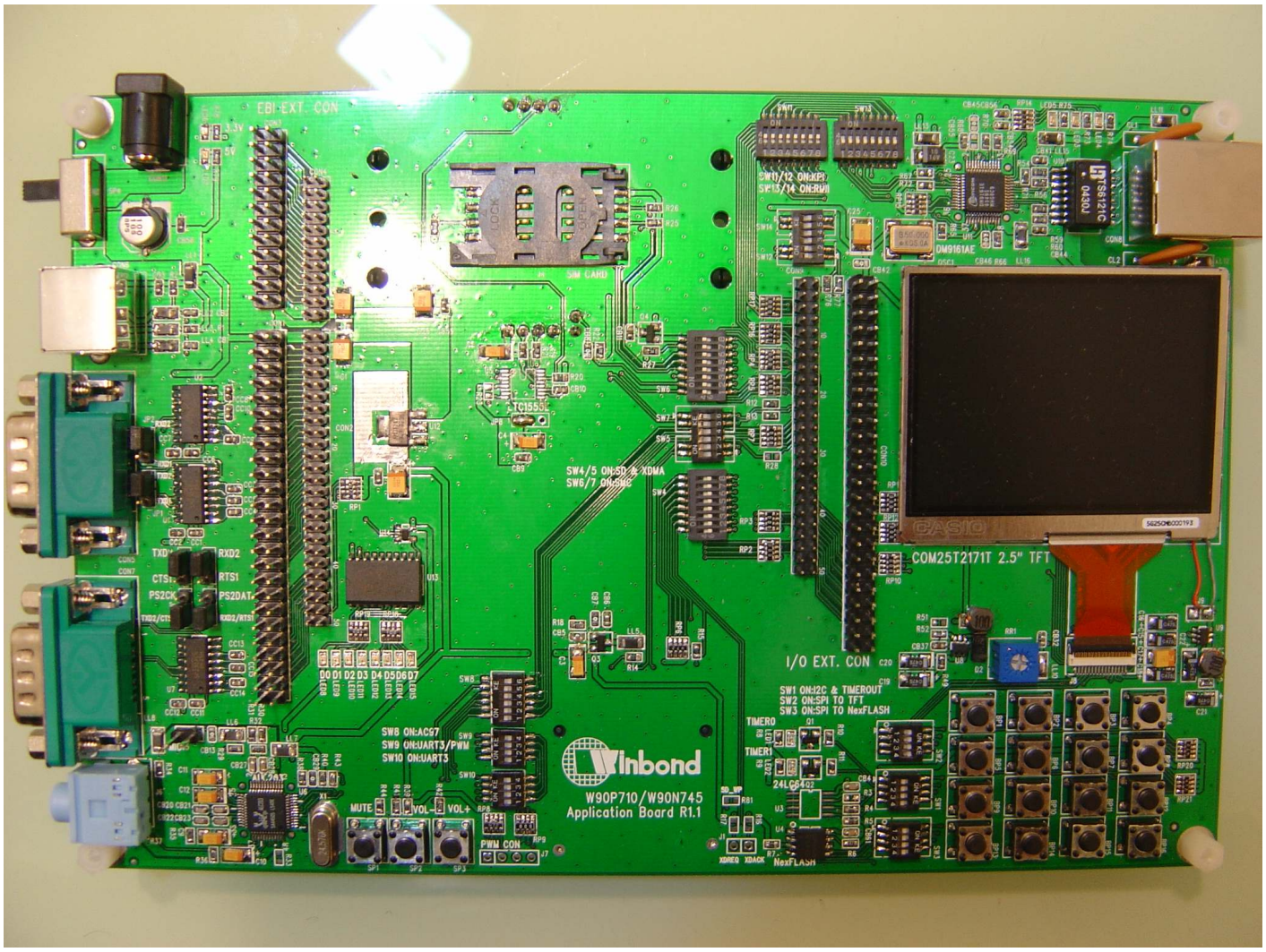
EBI-EXT. CON
SIM CARD
TC1555
SW4/5 ON:SD & XDMA
SW6/7 ON:SMC
COM25T2171T 2.5" TFT
I/O EXT. CON
SW1 ON:I2C & TIMEROUT
SW2 ON:SPI TO TFT
SW3 ON:SPI TO NexFLASH
SW8 ON:ACS7
SW9 ON:UART3/PWM
SW10 ON:UART3
Winbond
W90P710/W90N745
Application Board R1.1
MUTE
VOL-
VOL+
PWM CON
TIMER0
TIMER1
24LC64
NexFLASH
DM9161AE
TS6121C

Picture 2-3

2.2 System Architecture

2.2.1 Core module function block

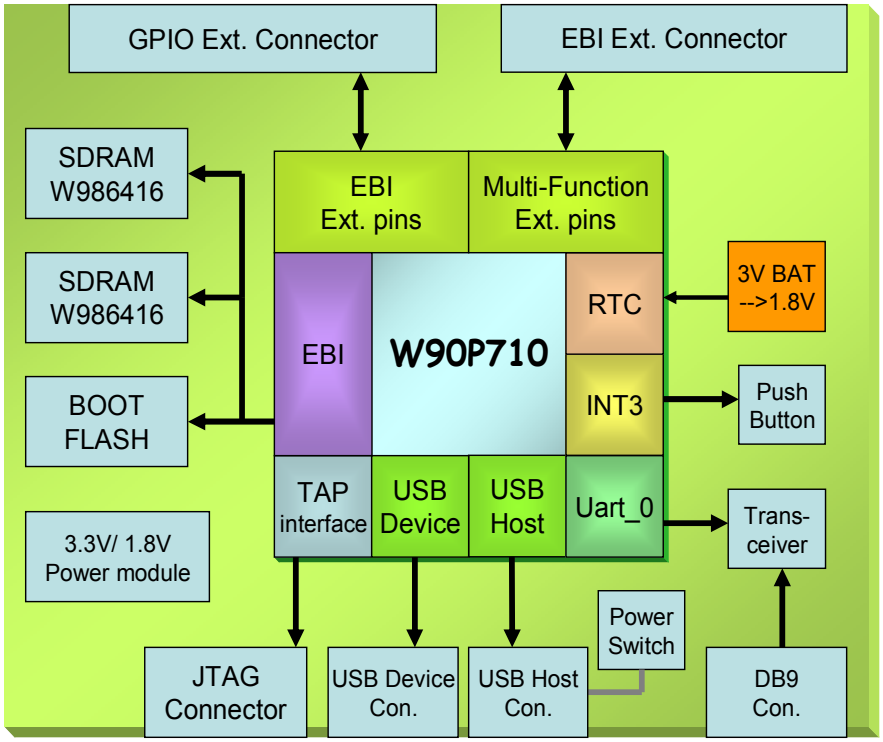

Figure 2-1

2.2.2 Application board function block

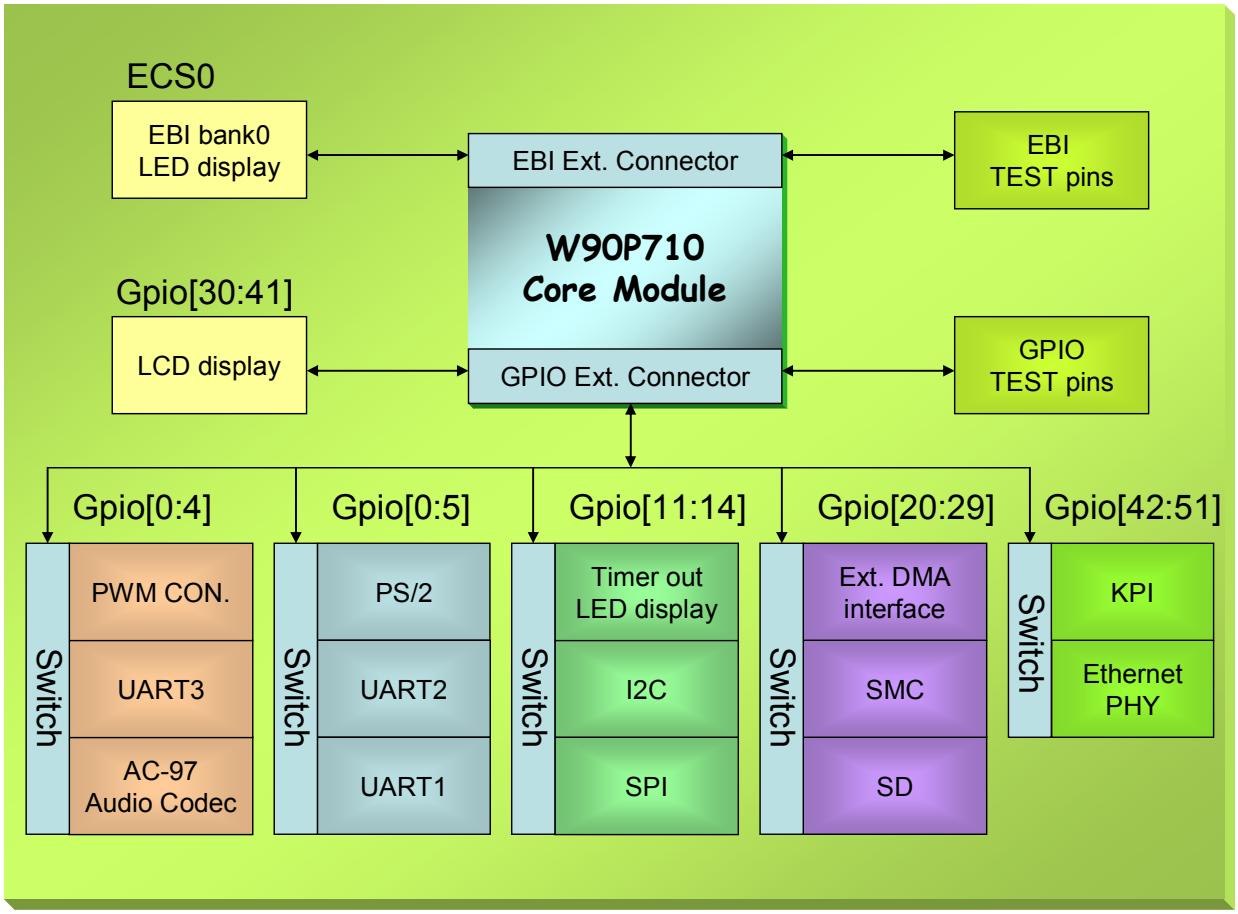

Figure 2-2

3 Board Configuration

The W90P710 evaluation board is set with default configuration. You may use this board with the default settings directly. However, you can also change the settings according to your requirement. Please conform to the correct settings you want before using this board.

3.1 Core Module configuration

3.1.1 System Clock Source selection (JP1)

The evaluation board supports system clock source selection, to short 1-2 of JP1 (pull-high SDD15) can set 80MHz Freq. for system operating clock (enable internal PLL) or short 2-3 of JP1 (pull-low SDD15) to set 15MHz (external crystal source) for system clock (disable internal PLL).

Jumper Setting	Jumper	Short 1-2	Short 2-3
Internal System Clock Select	JP1	Enable PLL(80MHz)	Disable PLL(15MHz)

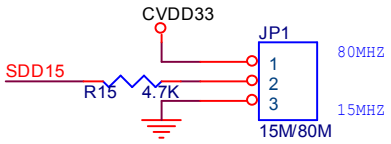

If pin D15 is pull-up, the PLL output clock is used as internal system clock
If pin D15 is pull-down, the external clock from EXTAL pin is served as internal system clock.

3.1.2 Endien Mode selection (JP2)

The evaluation board supports system endian mode selection, to short 1-2 of JP2 (pull-high SDD14) to set system operating mode at little endian mode or short 2-3 of JP2 (pull-low SDD14) can set system operating mode at Big endian mode.

Jumper Setting	Jumper	Short 1-2	Short 2-3
Endian mode Select	JP2	Little	Big

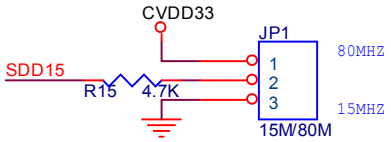

If pin D15 is pull-up, the PLL output clock is used as internal system clock
If pin D15 is pull-down, the external clock from EXTAL pin is served as internal system clock.

3.1.3 Boot Flash type selection (R5, R6)

There are two selectable resistors for Boot Flash type selection. The default setting connected FA21 pin to VDD33 for WINBOND Flash. Please connect FA21 to A21 when using AMD Flash and that will supported up to 4Mx16 size Flash for Boot Flash bank.

Optional Select	R5	R6	Flash Type
Flash Type	On	Off	AMD
	Off	On	WINBOND

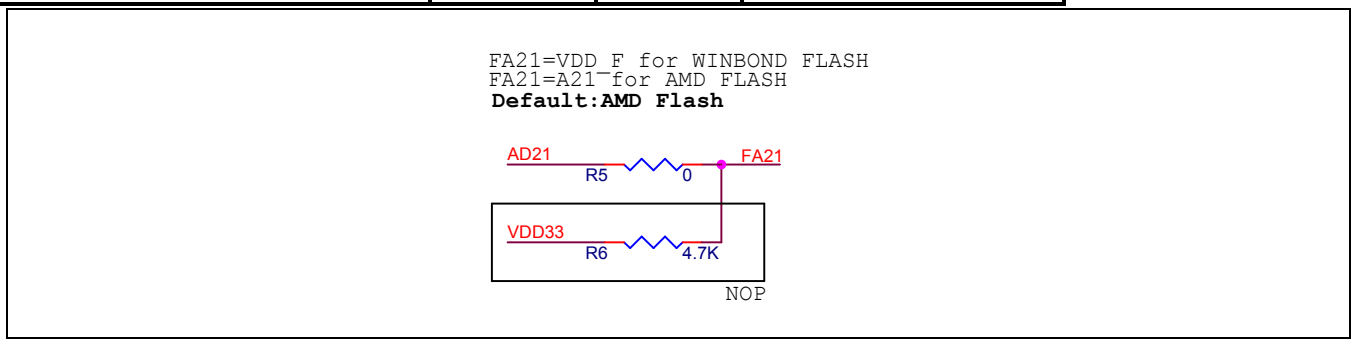

3.1.4 Reset Button (SP1)

The SP 1 is the System reset button that connected to a reset IC (SP70 5 S) and it will generate about 200ms low pulse for whole system reset.

Push Button	Button
System Reset	SP 1

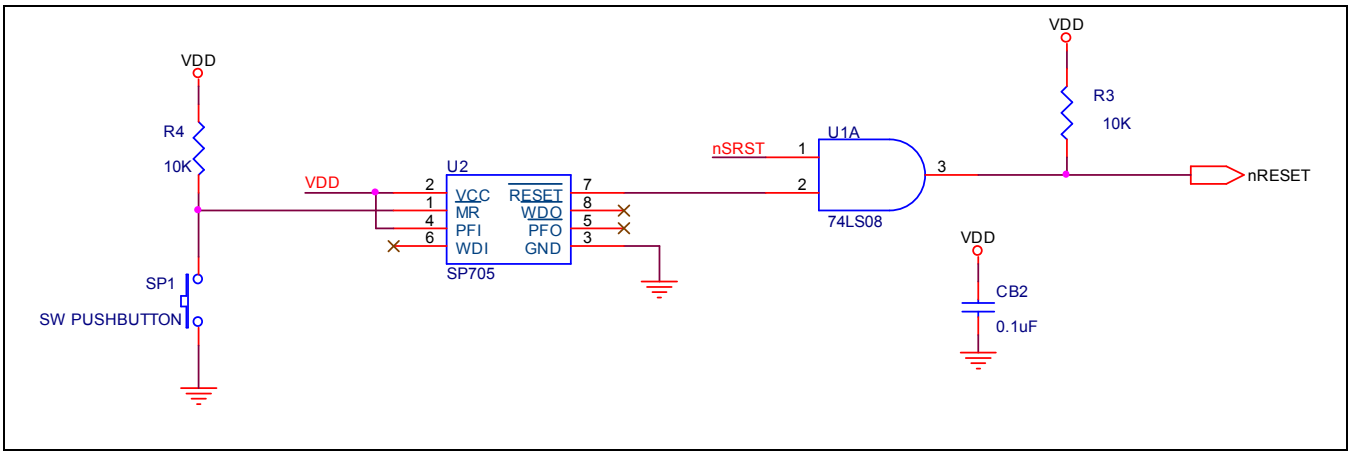

3.2 Application board configuration

3.2.1 UART1/UART2/PS2 selection (JP1~JP6)

W90P710 offers a UART1/UART2/PS2 multi-function port which can supports UART1/2 or PS2 interface by difference settings. To Use PS2 function, please short 2-3 of JP3 and JP4 or short 1-2 to select UART function.

Function select	Jumper settings					
	JP1	JP2	JP3	JP4	JP5	JP6
UART1 (TX/RX)	1-2	1-2	-	-	-	-
UART1 (TX/RX/CTS/RTS)	1-2	1-2	1-2	1-2	-	-
UART2	2-3	2-3	2-3	2-3	-	-
PS2	-	-	-	-	2-3	2-3

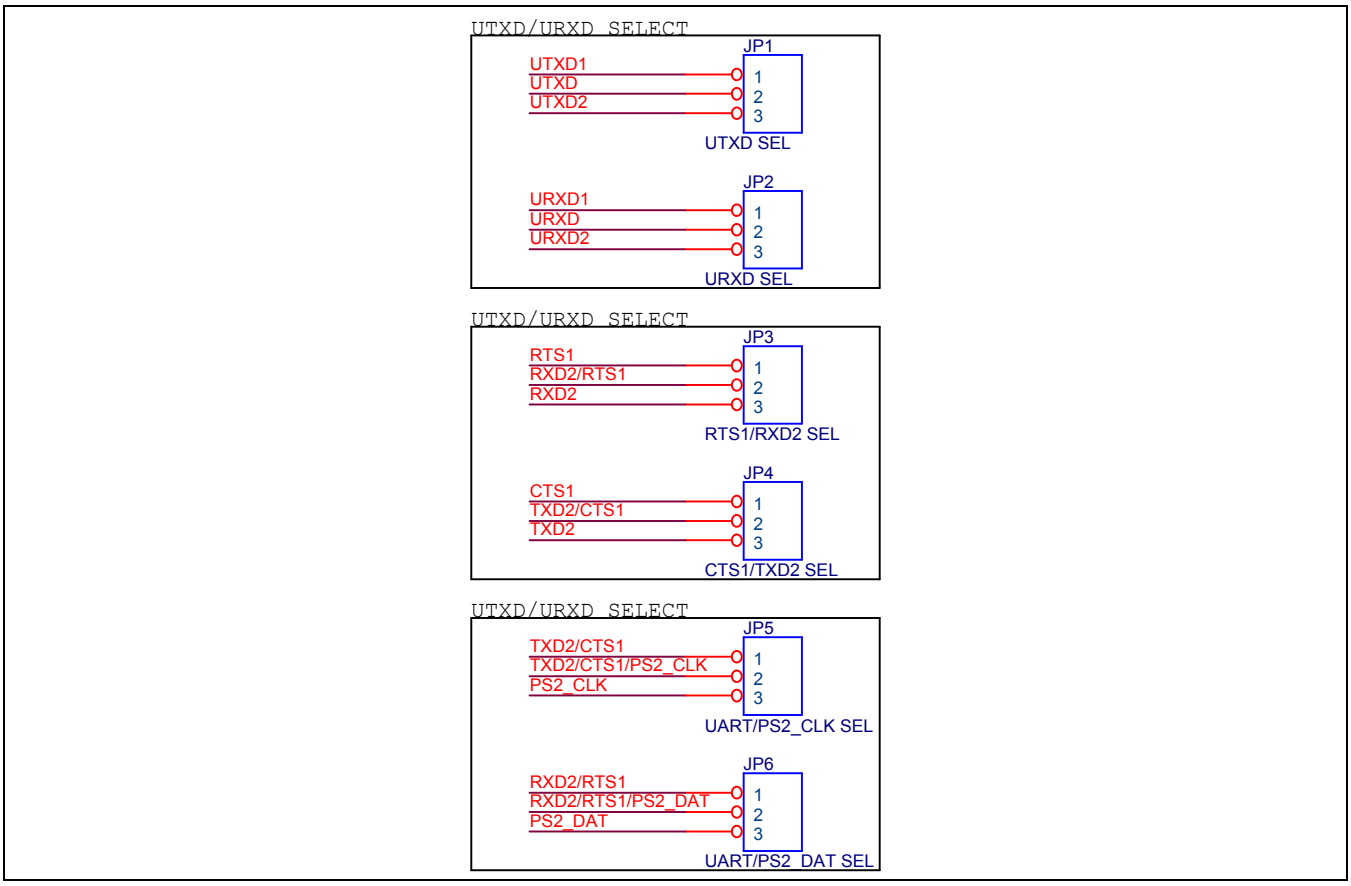

3.2.2 UART3/AC97/PWM selection (SW8~SW10)

W90P710 supports a UART3/AC97/PWM multi-function port which can supports UART3 or AC97 or PWM output function by difference settings. Please see the following table for more information:

Function select	Switch settings		
	SW8	SW9	SW10
UART3 (TX/RX/DTR/DSR)	OFF	ON	ON
PWM	OFF	ON	OFF
AC97	ON	OFF	OFF

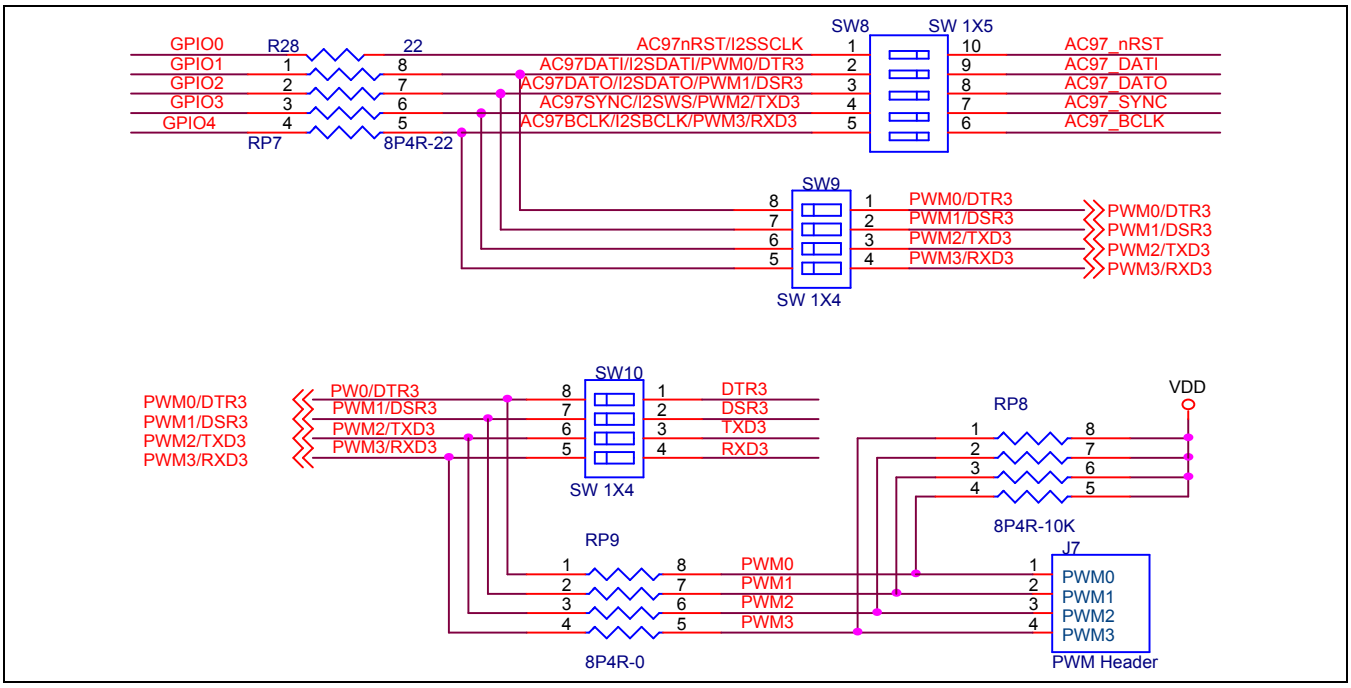

3.2.3 I2C/SPI/TIMER-OUT selection (SW1~SW3)

W90P710 supports an I2C/SPI/TIMER-OUT multi-function port which can supports I2C or SPI or Timer-out function by difference settings. The I2C interface connected to EEPROM, the SPI interface connected to serial flash and the timer-out connected to LED display. Please see the following table for more information:

Function select	DEVICE	Switch settings		
		SW1	SW2	SW3

I2C	24LC64	ON	OFF	OFF
SPI	CASIO PANNEL	OFF	ON	OFF
	W25P16	OFF	OFF	ON
TIMER OUT	LED	ON	OFF	OFF

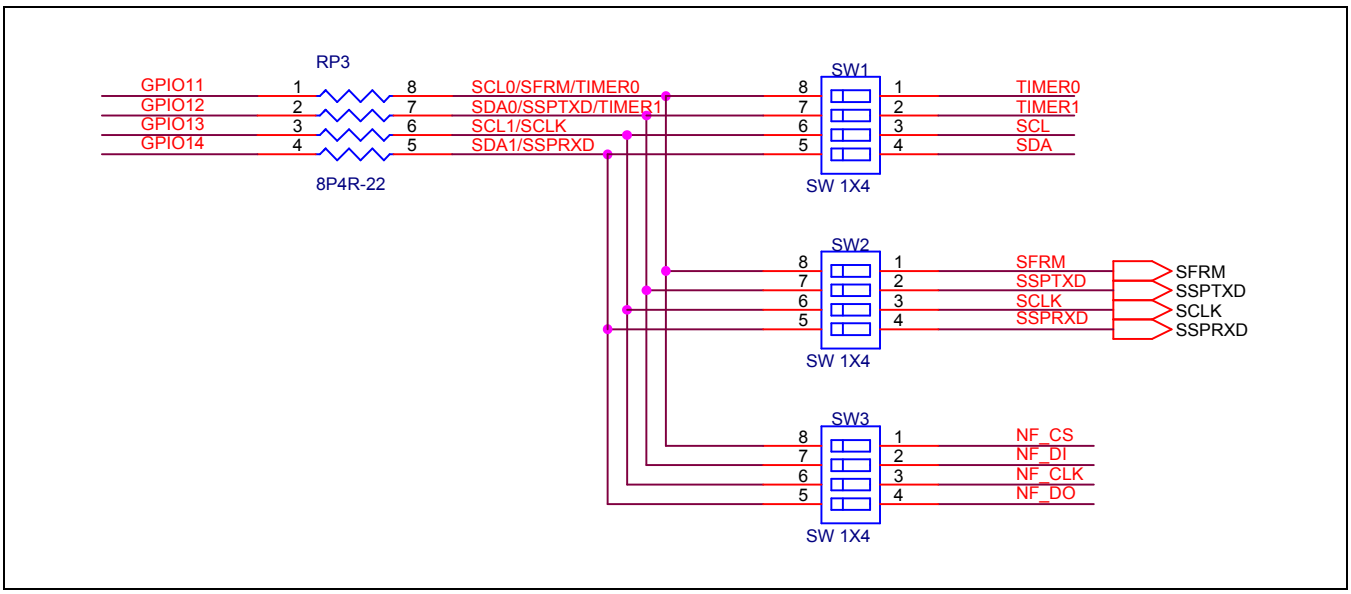

3.2.4 KPI/RMII selection (SW11~SW14)

The W90P710 offers one KPI/RMII multi-function port which can supports KPI or RMII function by difference settings. The KPI is for matrix keypad interface and the RMII is for Ethernet communication. Please see the following table for more information:

Function select	Switch settings			
	SW11	SW12	SW13	SW14
KPI	ON	ON	OFF	OFF
RMII	OFF	OFF	ON	ON

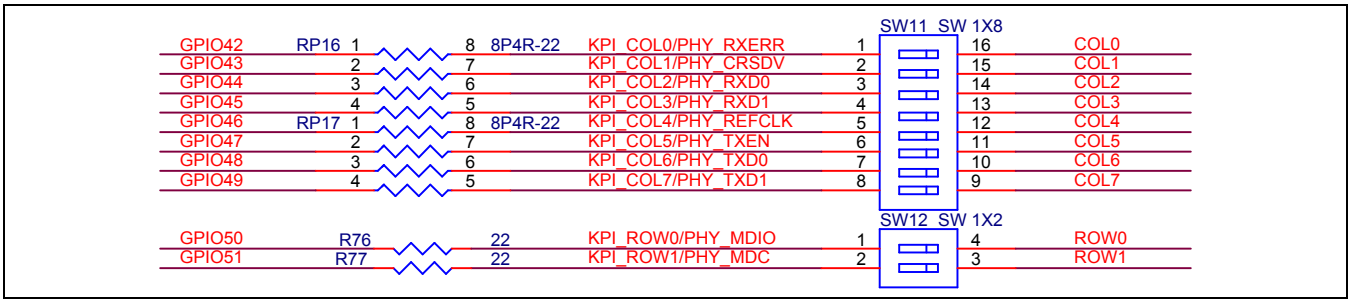

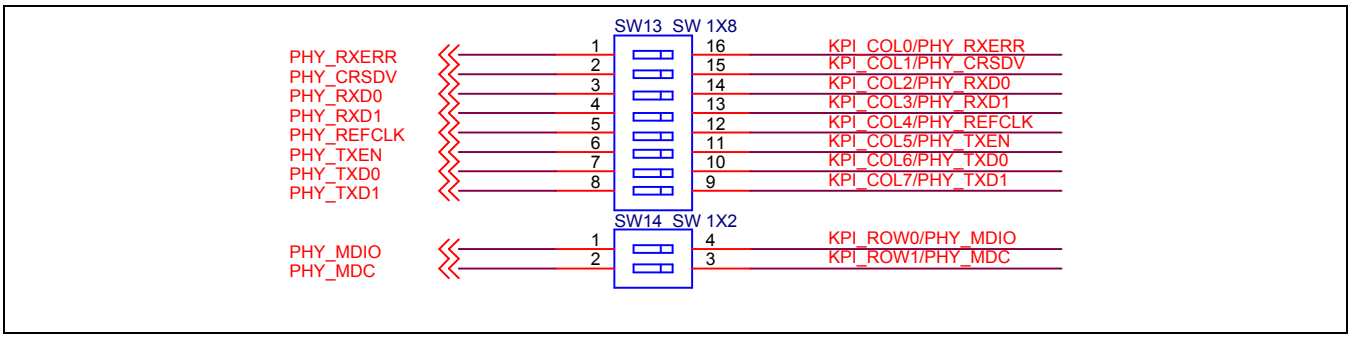

3.2.5 SMC/SD selection (SW4~SW7)

The W90P710 offers one SMC/SD multi-function port which can supports smart card or SD card function by difference settings. The SMC interface can supports two 7816-3 card and the SD interface supports one SD memory card. Please see the following table for more information:

Function select	Switch settings			
	SW4	SW5	SW6	SW7
SMC	OFF	OFF	ON	ON
SD	ON	ON	OFF	OFF

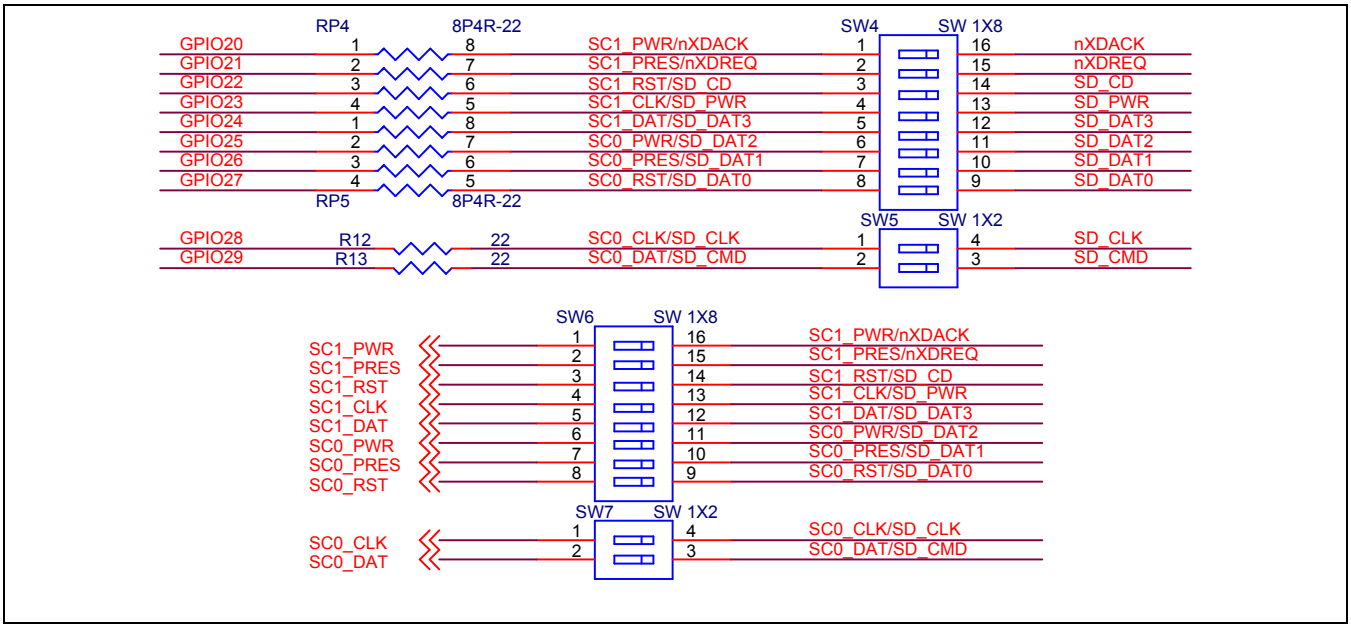

3.2.5.1 SMART CARD0 POWER type selection (JP8)

This development board supports a smart card0 power type selection Jumper which can select the smart card0 supply voltage supported by LTC1555L power switch. Please see the following table for detail.

POWER select	JUMPER setting
	JP8
5V	1-2
3V	2-3

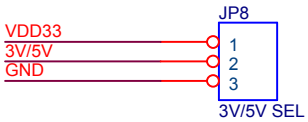

4 Circuit Description

4.1 SDRAM

Total Size	Memory Configurations	Bank	Bus Width	Part number
16Mbyte	1Mx16x4 Banks	2	32-bit	W986416
32Mbyte	2Mx16x4 Banks	2	32-bit	W981216
64Mbyte	4Mx16x4 Banks	2	32-bit	W982516

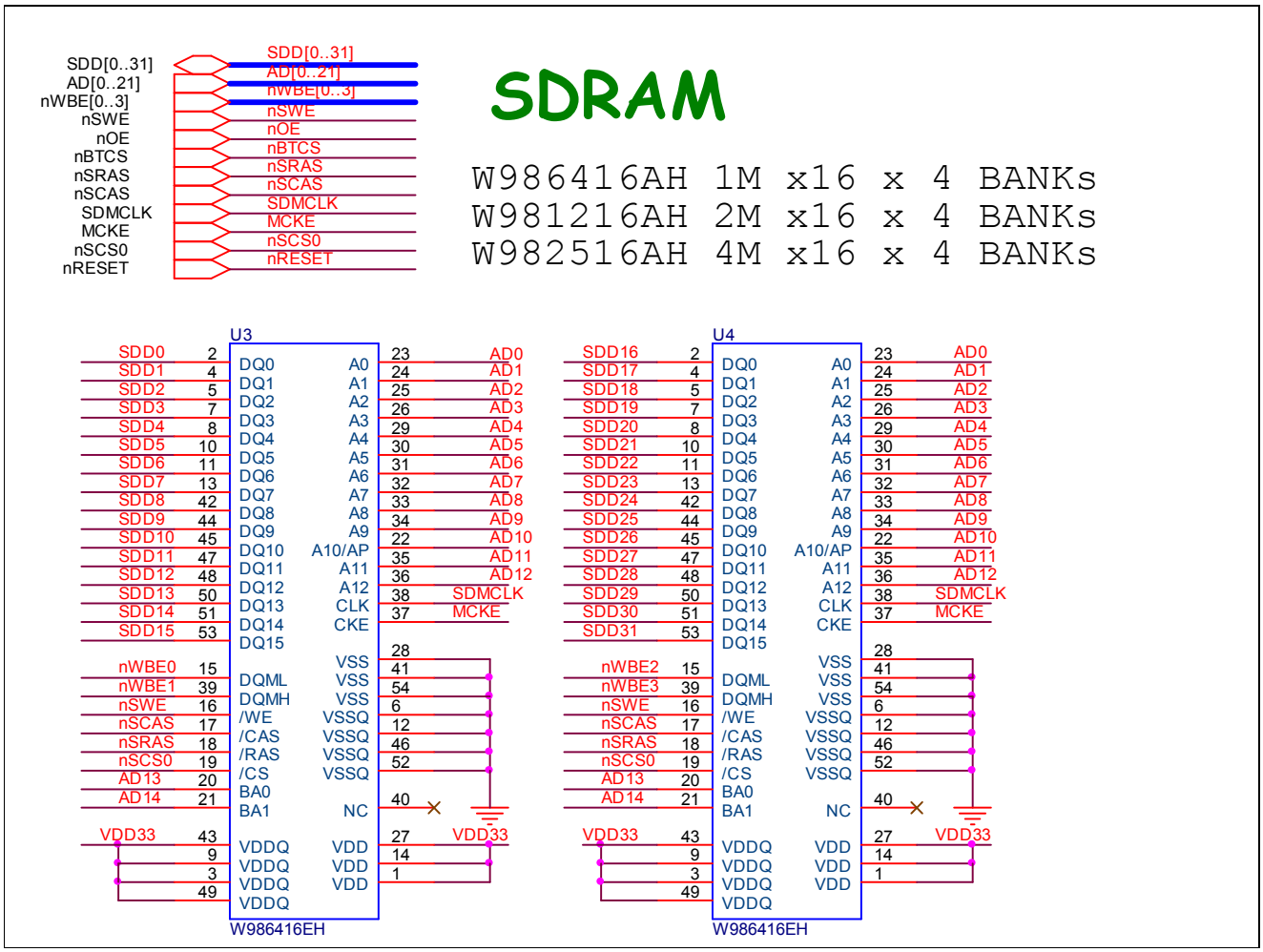

4.2 FLASH

Total Size	Memory Configurations	Bus Width	Part number
2Mbyte	1Mx16	8/16-bit	W28J160
4Mbyte	2Mx16	8/16-bit	W19L320ABT
8Mbyte	4Mx16	8/16-bit	Am29LV640

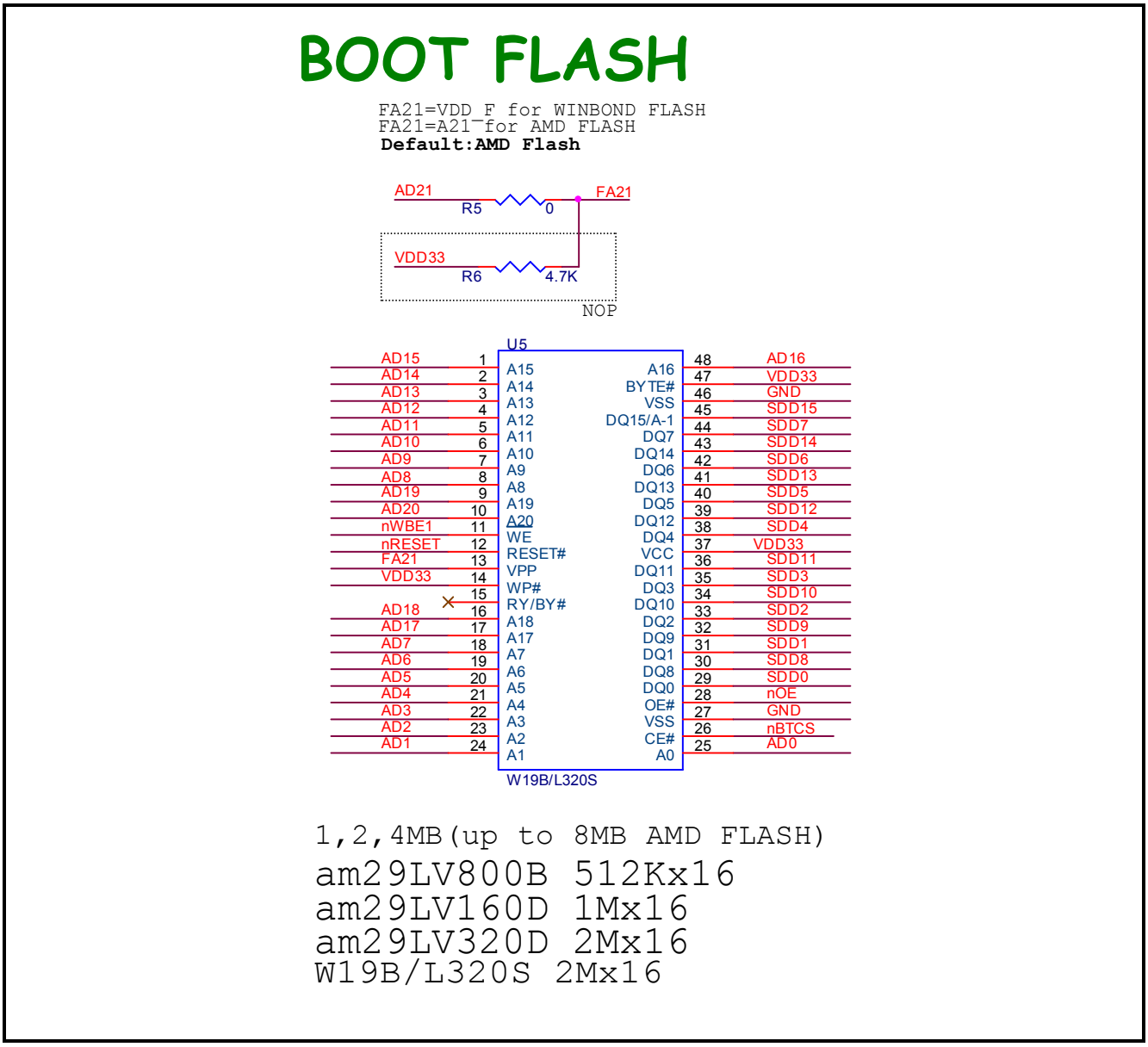

4.3 USB 1.1 Host/Device

USB port	Description
Host	CON7 of Core module(A-Type Connector)
Device	CON8 of Core module(mini B-Type Connector)

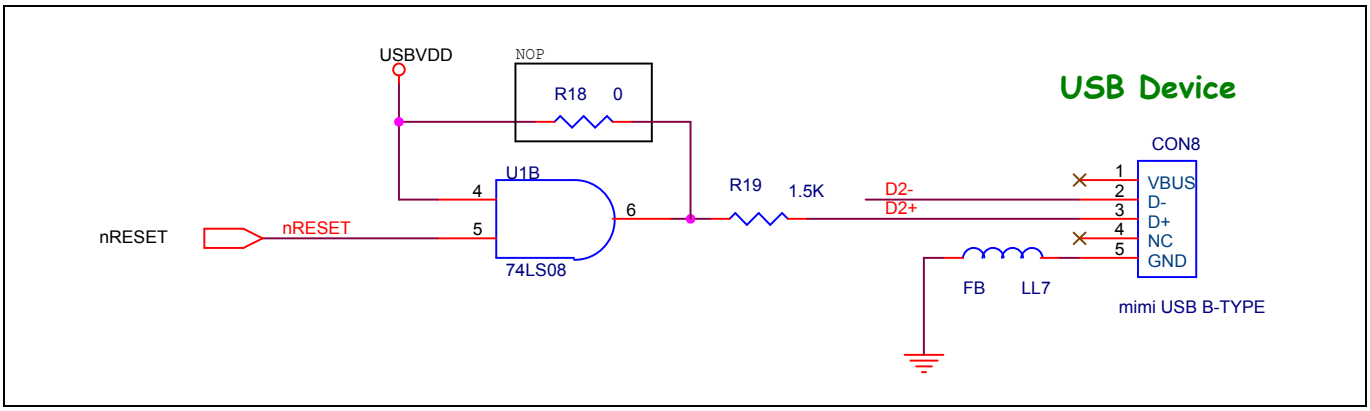

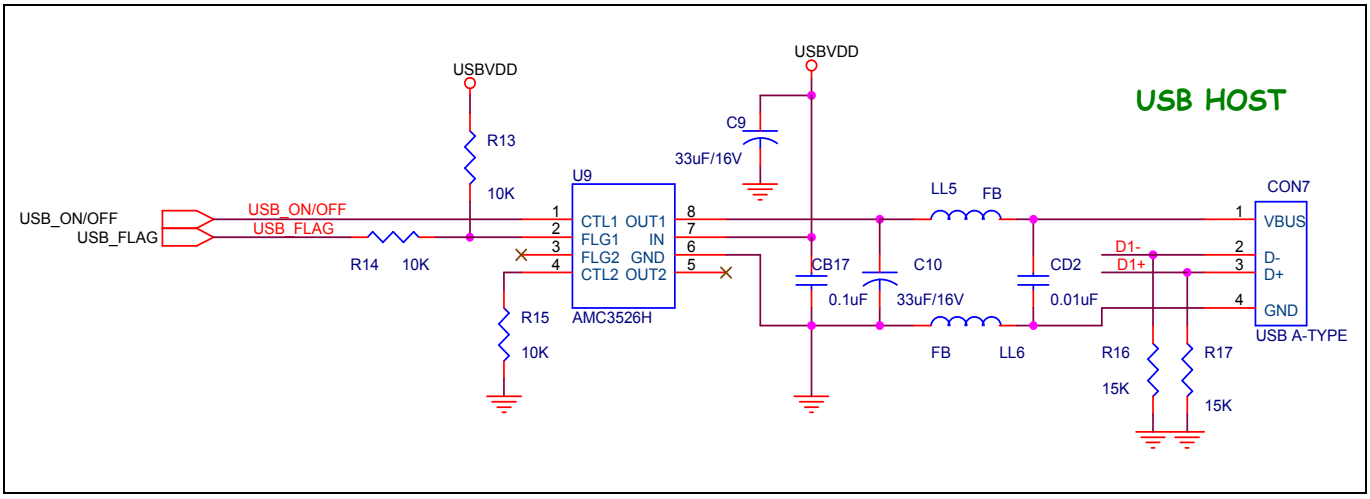

4.4 UART

UART port	Description
Port 0	CON6 of Core module (Female Type)
Port 1	CON5 of Ap board(Male Type)
Port 2	CON6 of Ap board (Male Type)
Port 3	CON7 of Ap board (Male Type)

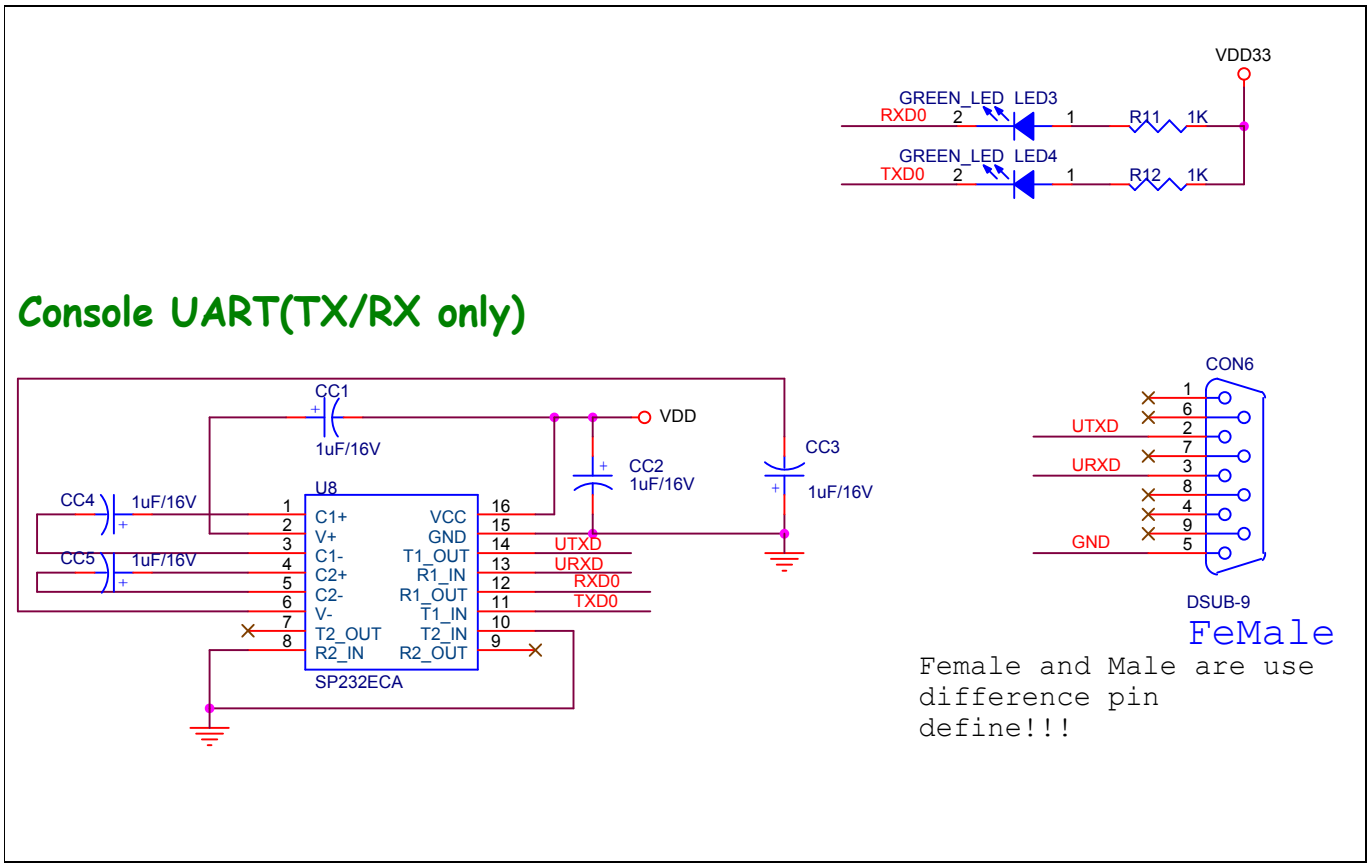

UART1

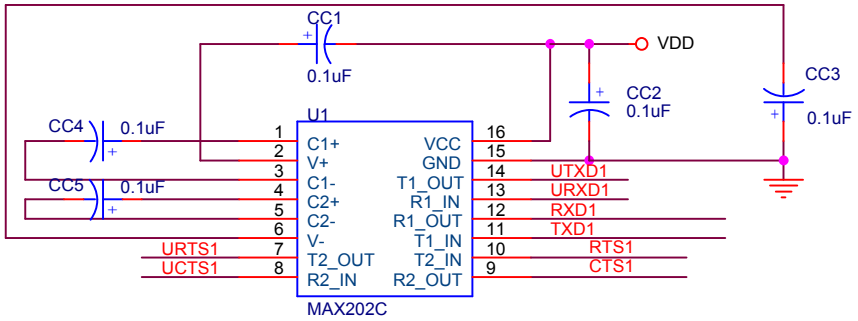

UART2

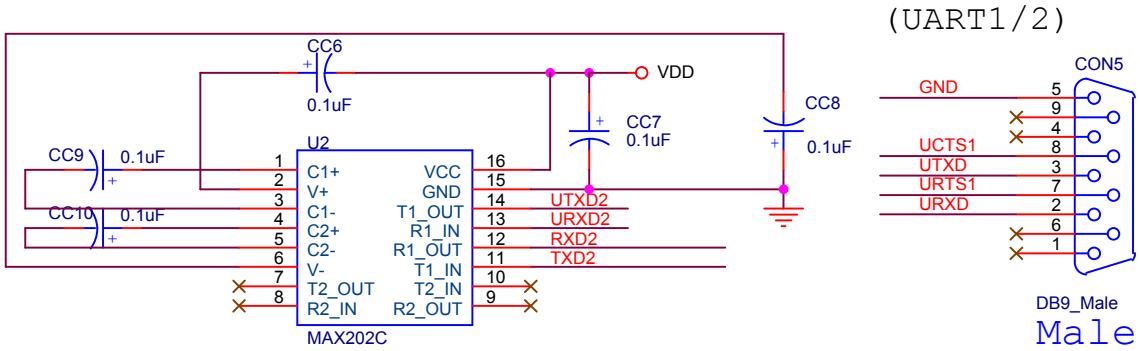

UART3

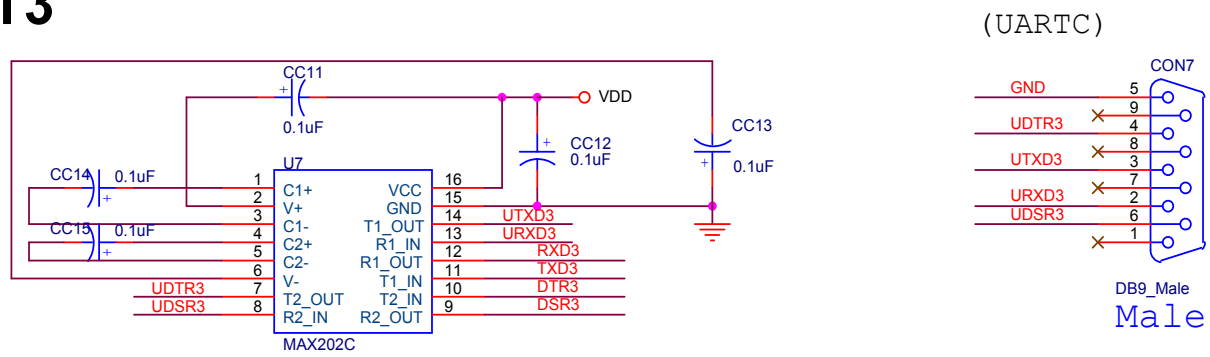

4.5 PS/2

PS/2 port	In/Out signals	Description
One port	DAT,CLK	CON11 (Mini-DIN-6)

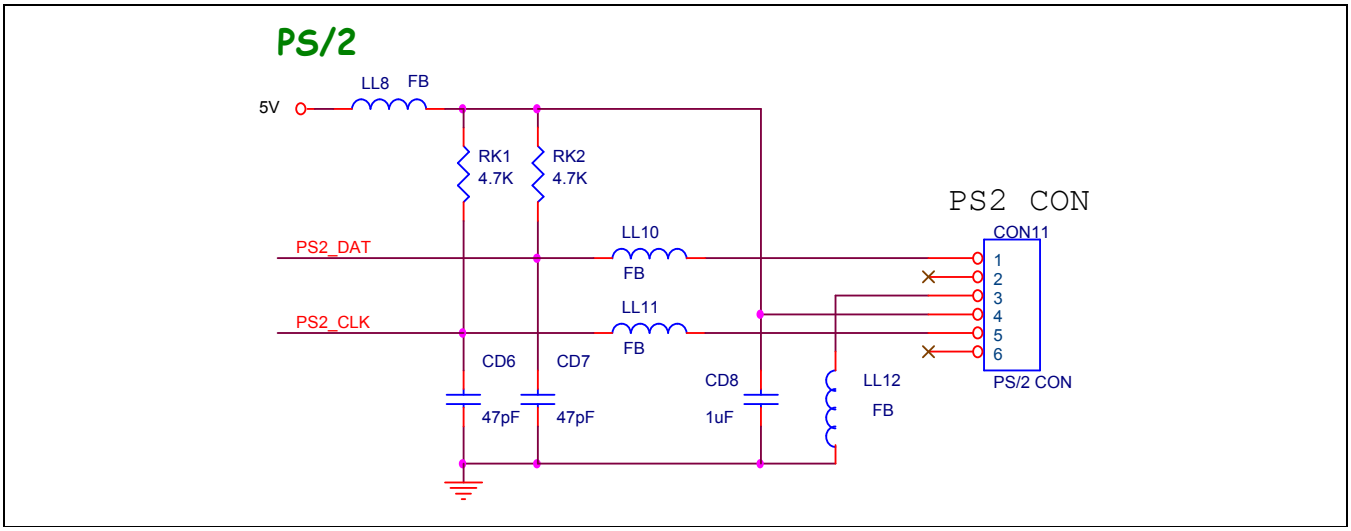

4.6 LCD interface

Supports Type	Resolution	data Width	Description
CASIO COM25T2171	480x240	8-bit	J8

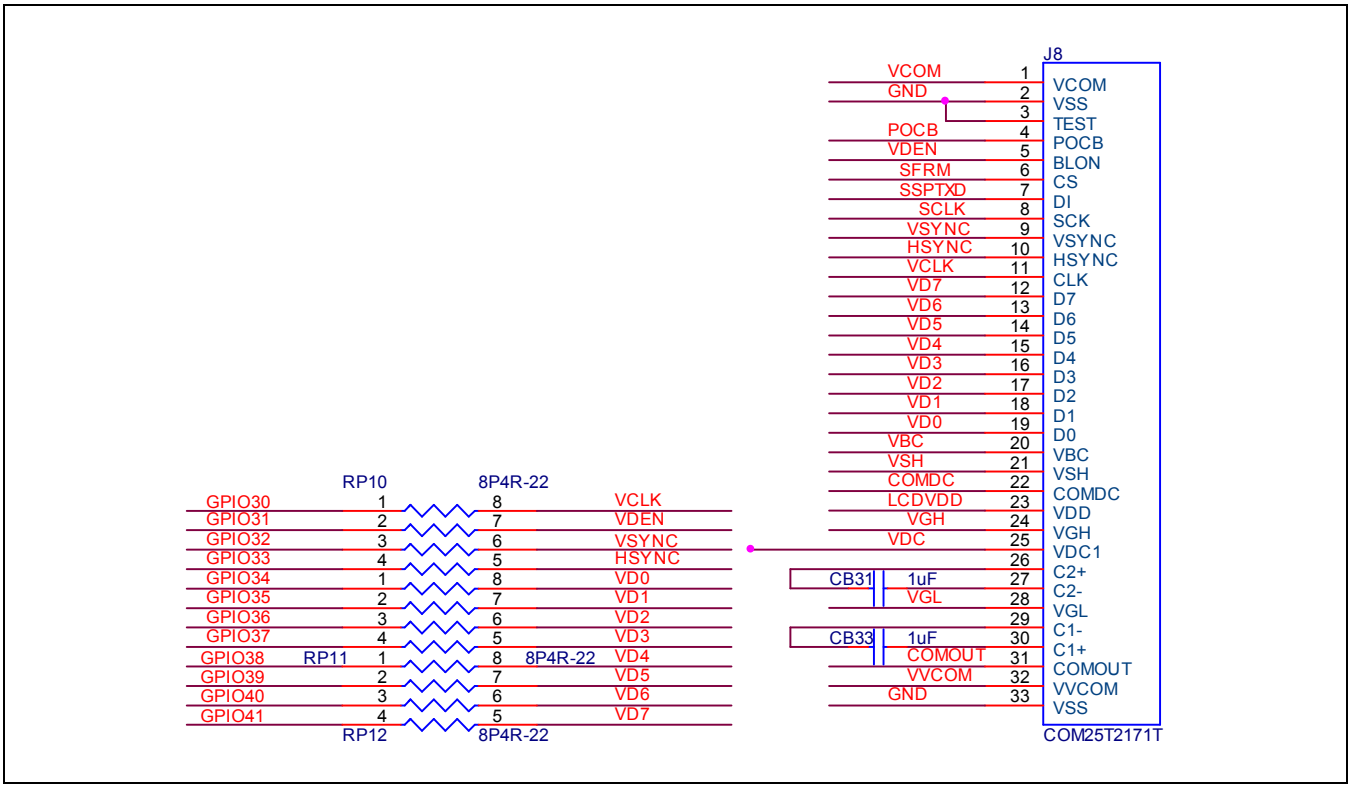

Supports Type	resolution	data Width	Description
AUO A030DL01	960x240	8-bit	J1 of module board

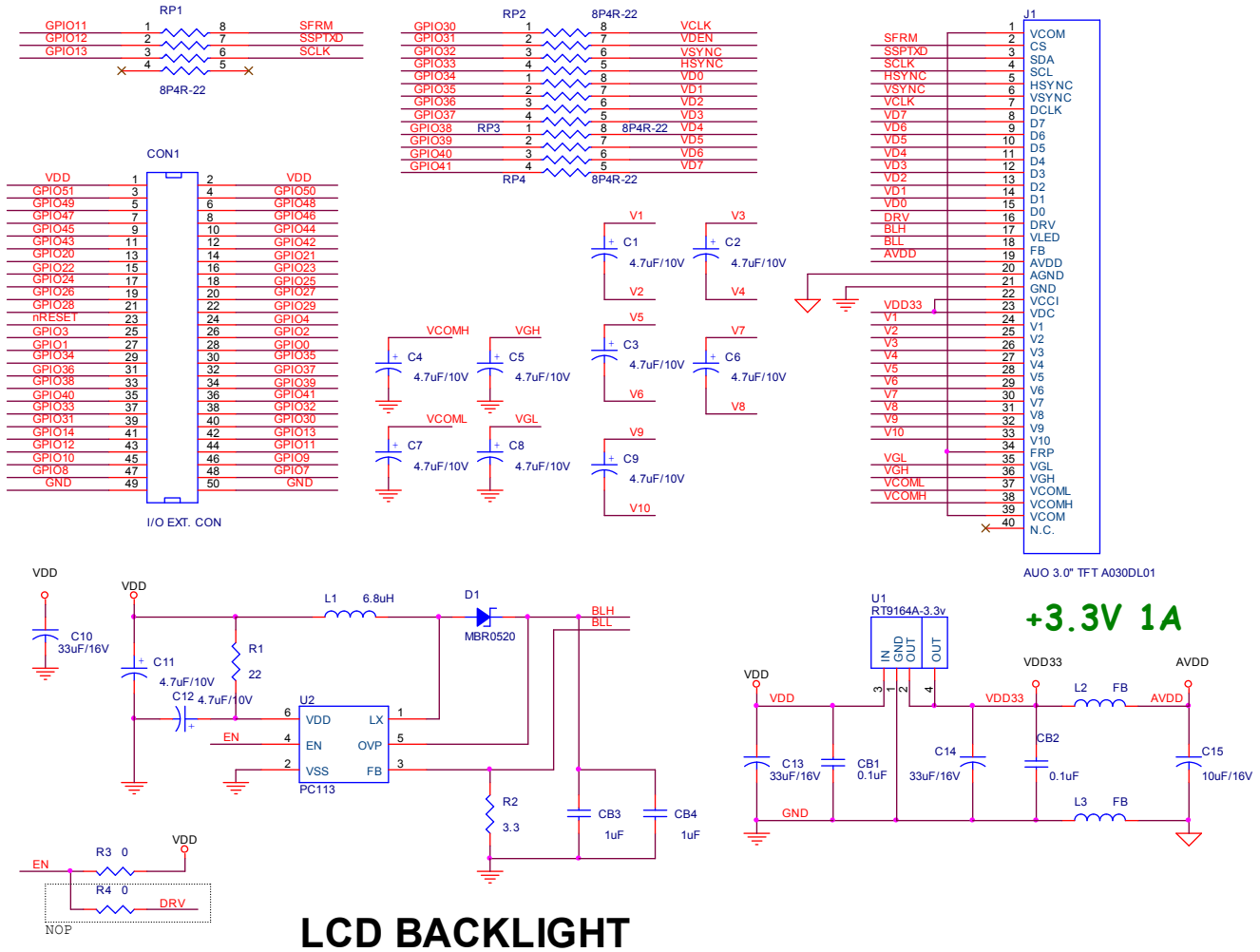

LCD BACKLIGHT

4.7 Keypad Interface

Supports Type	Output signals	Input signals	Description
2x8 Matrix	KPI_ROW[0-1]	KPI_COL[0-7]	BP1-BP16

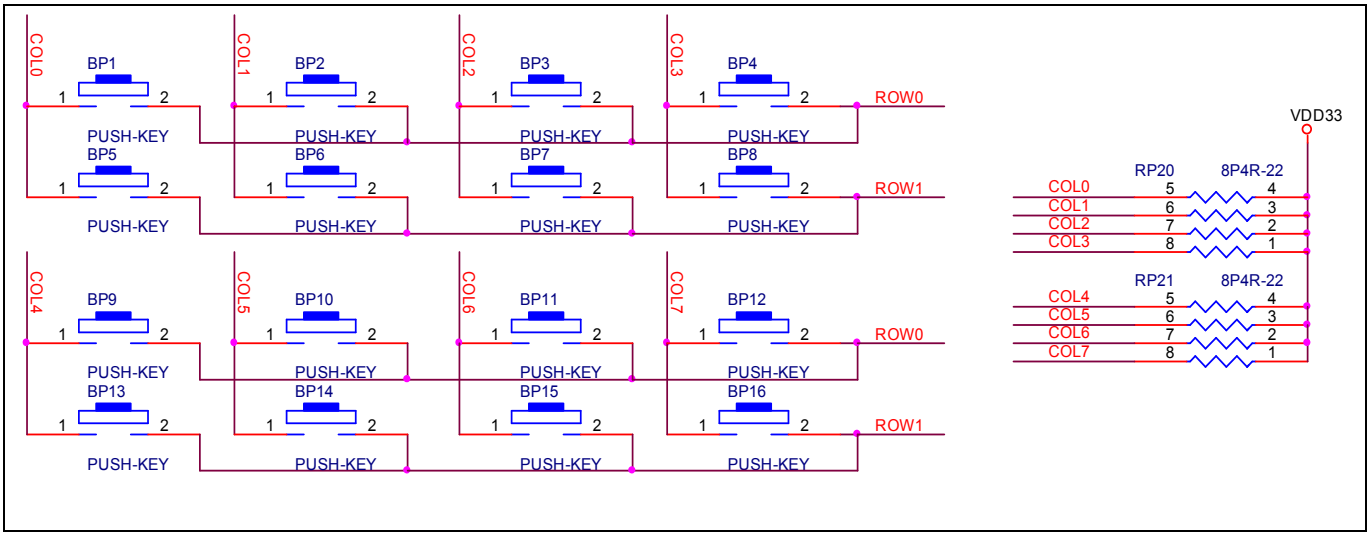

4.8 JTAG 14-PIN header Interface

Supports Type	In/Out signals	Description
JTAG Interface	TDO,TDI,TMS,TCK,nTRST,nSRST	CON4

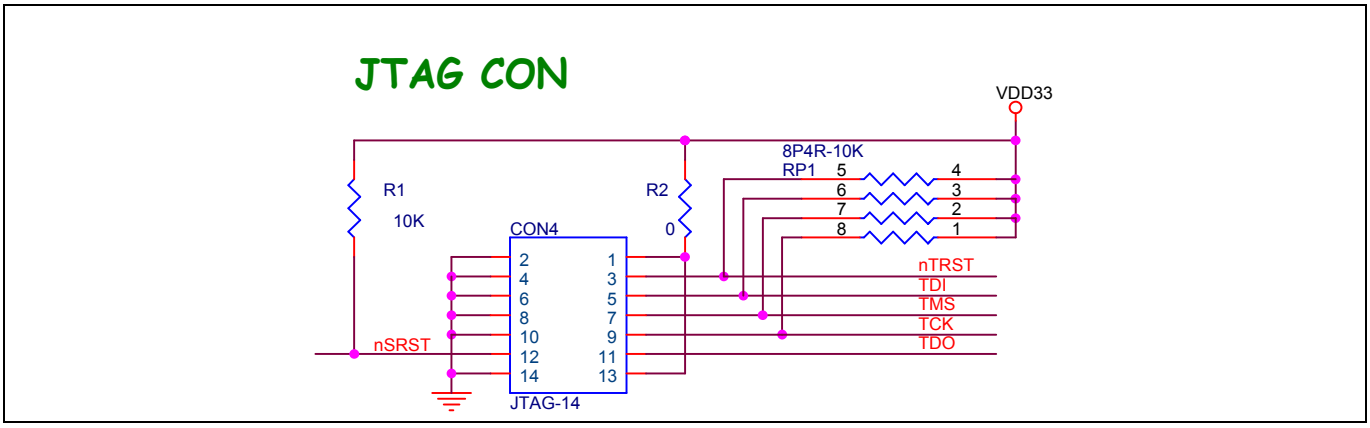

4.9 Ethernet

Interface Type	In/Out signals	Description
RMII	RMII interface	Physical layer supported by DM9161A/AE

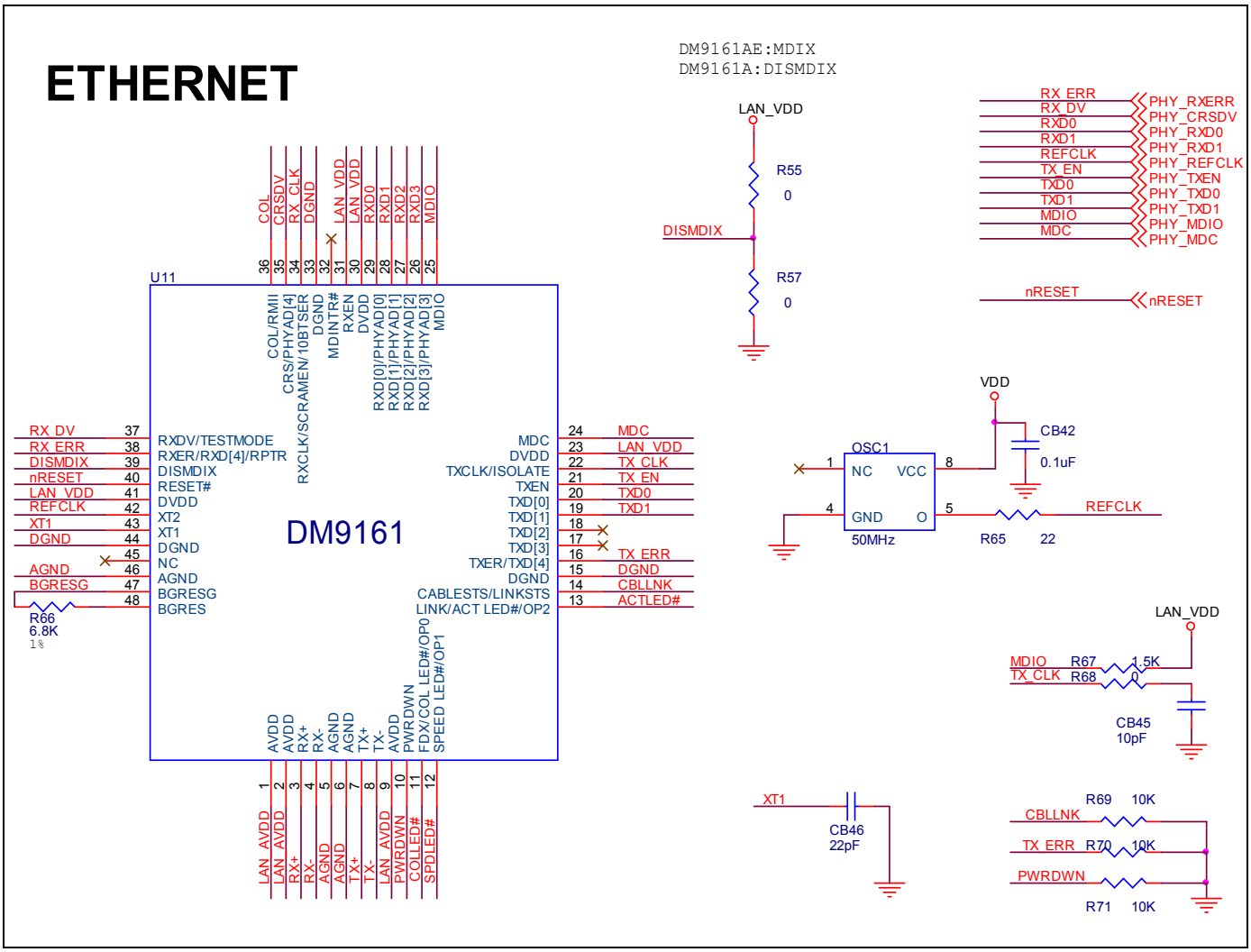

4.10 RTC

W90P710 integrated RTC controller and needed 1.8V DC voltage to supply the RTC cell. The development board has two ways to supply the voltage, one is from onboard LDO regulator RT9161 (mount R7), and the other way by external power source via RTCVDD pin (mount R10).

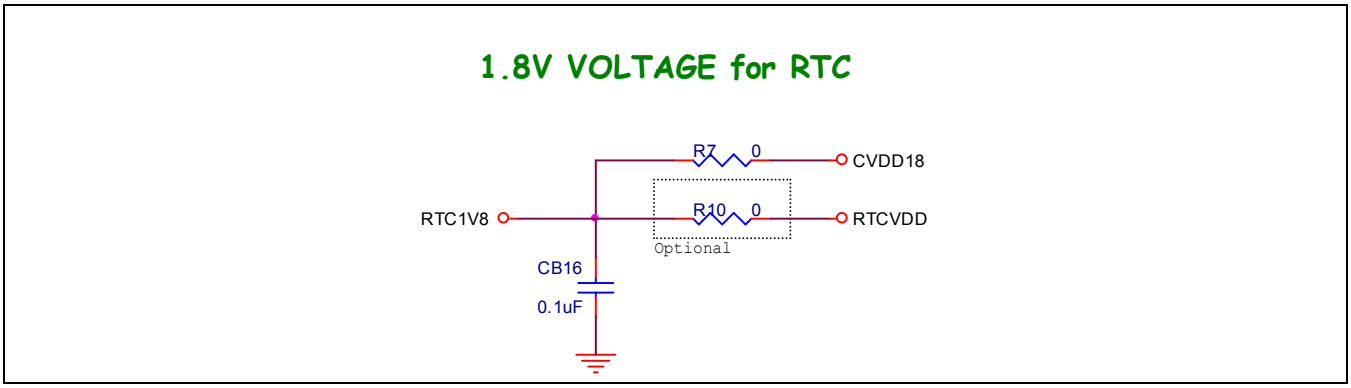

4.11 SPI Interface

W90P710 integrated SPI interface and connected to a WINBOND serial flash in the application board. Please see the following schematic for more detail.

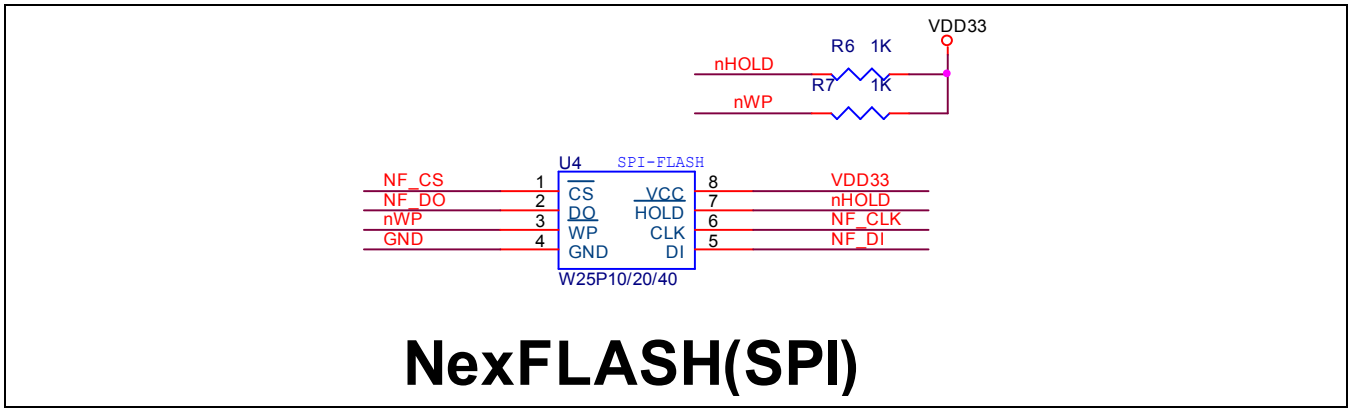

4.12 Timer output

W90P710 integrated timer output function and the development board connected two timer-out signals to LED display. Please see the following schematic for more detail.

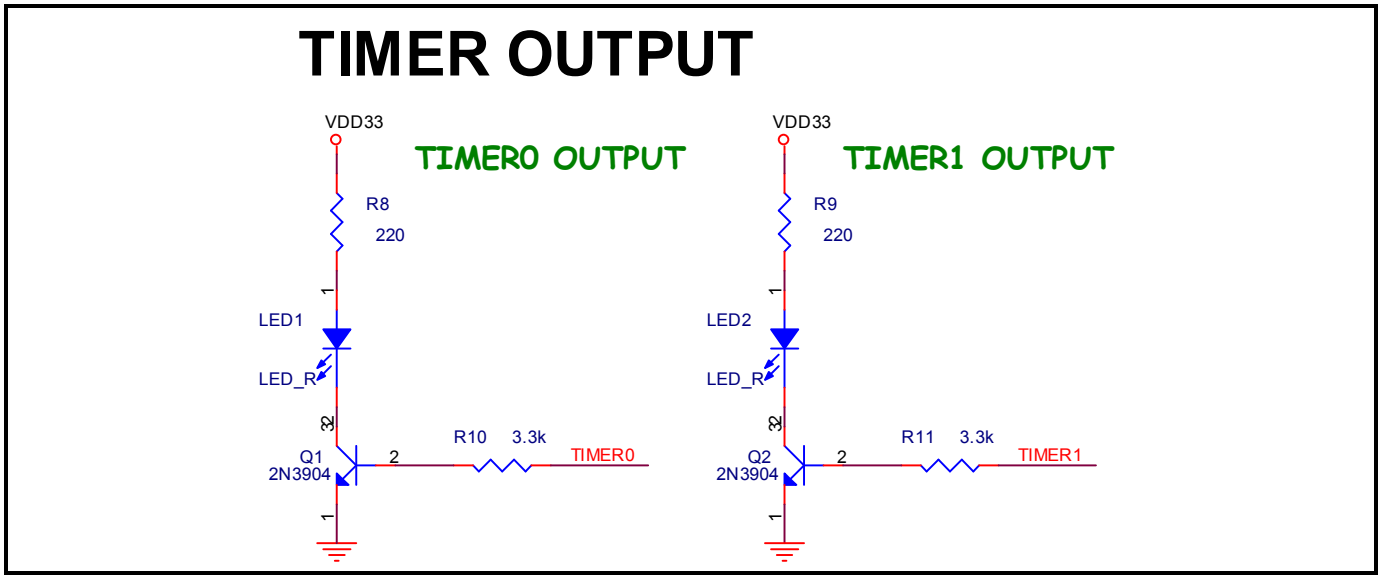

4.13 I2C

W90P710 integrated I2C interface and connected the SCL and SDA signals to a serial EEPROM which addressed at 0x0H. Please see the following schematic for more detail.

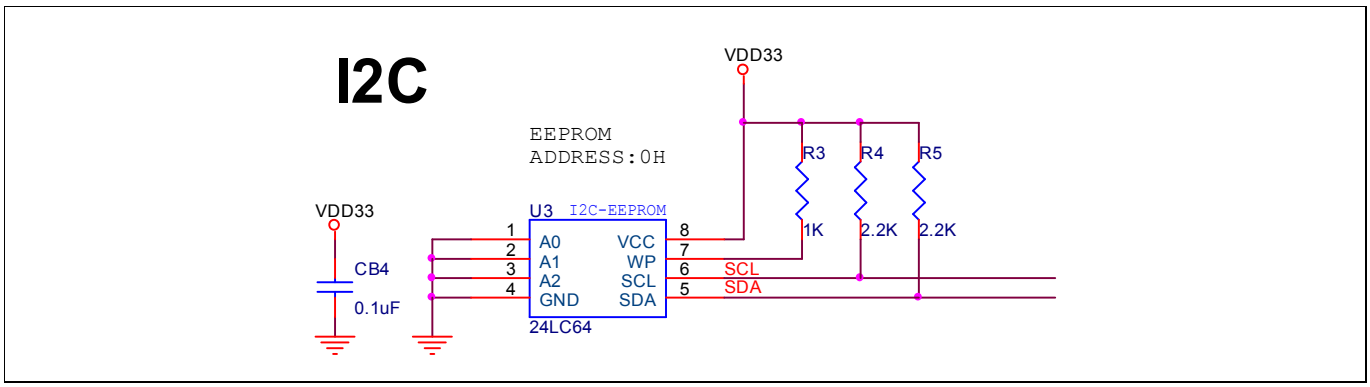

4.14 SD card interface

W90P710 integrated SD memory card interface and connected to a SD card slot in application board. One power switch controlled by SD_PWR signal to control the power on/off for SD memory card. Please see the following schematic for more detail.

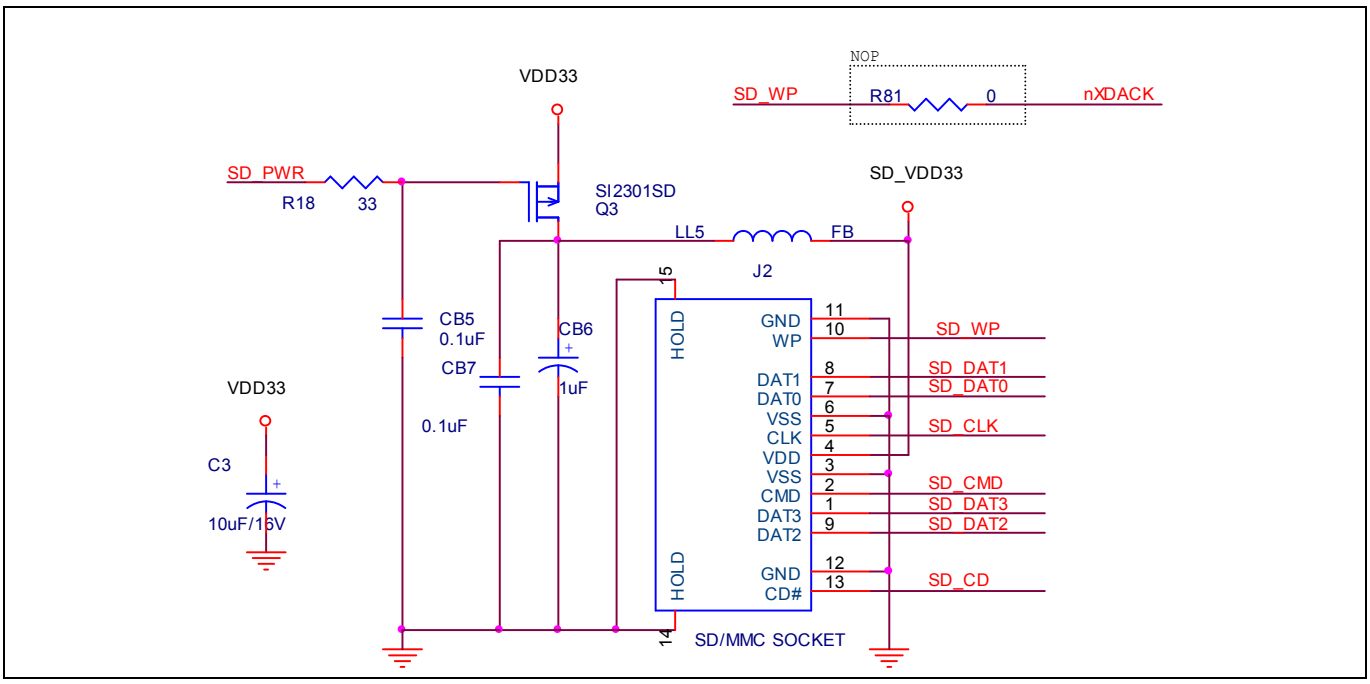

4.15 Ext. DMA interface

W90P710 supports external DMA request function from external device. The development board connected the nXDACK and nXDREQ signals to connector J1. Please connect the external DMA Request/Ack signal to the interface.

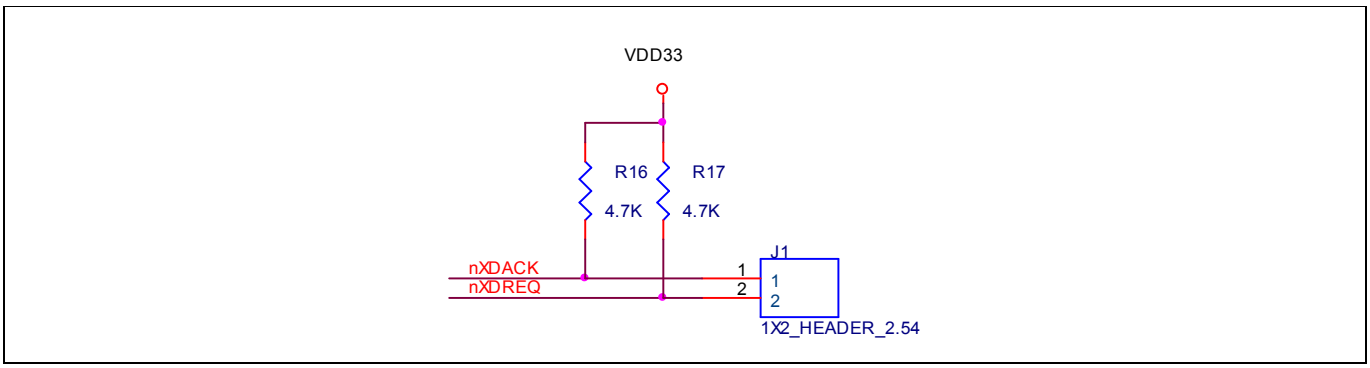

4.16 SMC interface

W90P710 integrated smart card controller and the application board connected the interface to a smart card slot and a SIM type socket. The smart card0 connected with an external level-shifter to support 5V and 3V card. The smart card1 interface connected to card directly but only can supports 3V SIM type card because the W90P710 I/O voltage level is 3.3V. Please see the following schematic for more detail.

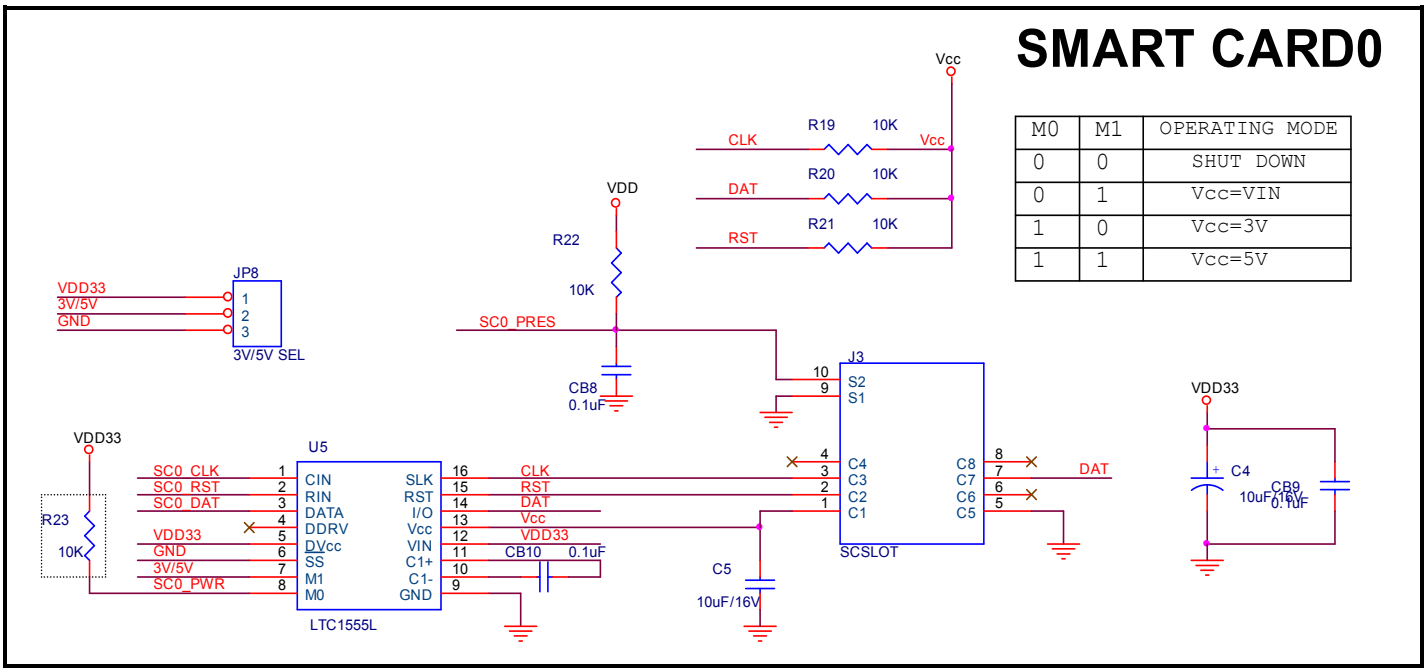

M0	M1	OPERATING MODE
0	0	SHUT DOWN
0	1	Vcc=VIN
1	0	Vcc=3V
1	1	Vcc=5V

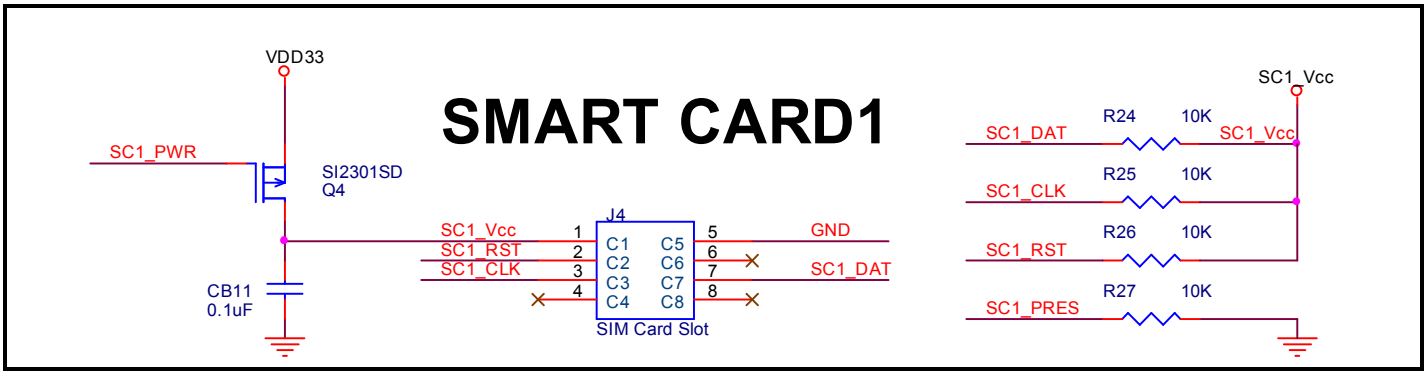

4.17 GPIO TEST interface

The evaluation board reserved GPIO expansion interface for system development and testing. Please see the following connector pin arrangement for more detail.

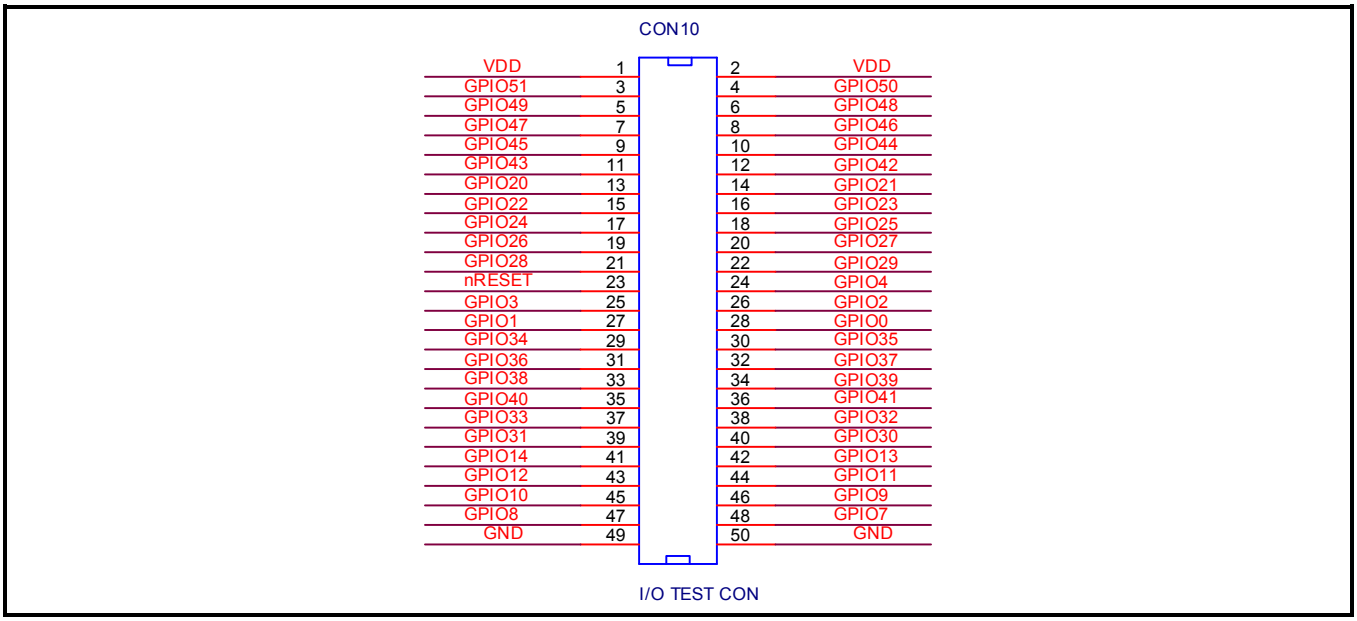

4.18 EBI interface

The evaluation board reserved EBI expansion interface for system expansion and testing. Please see the following connector pin arrangement for more detail.

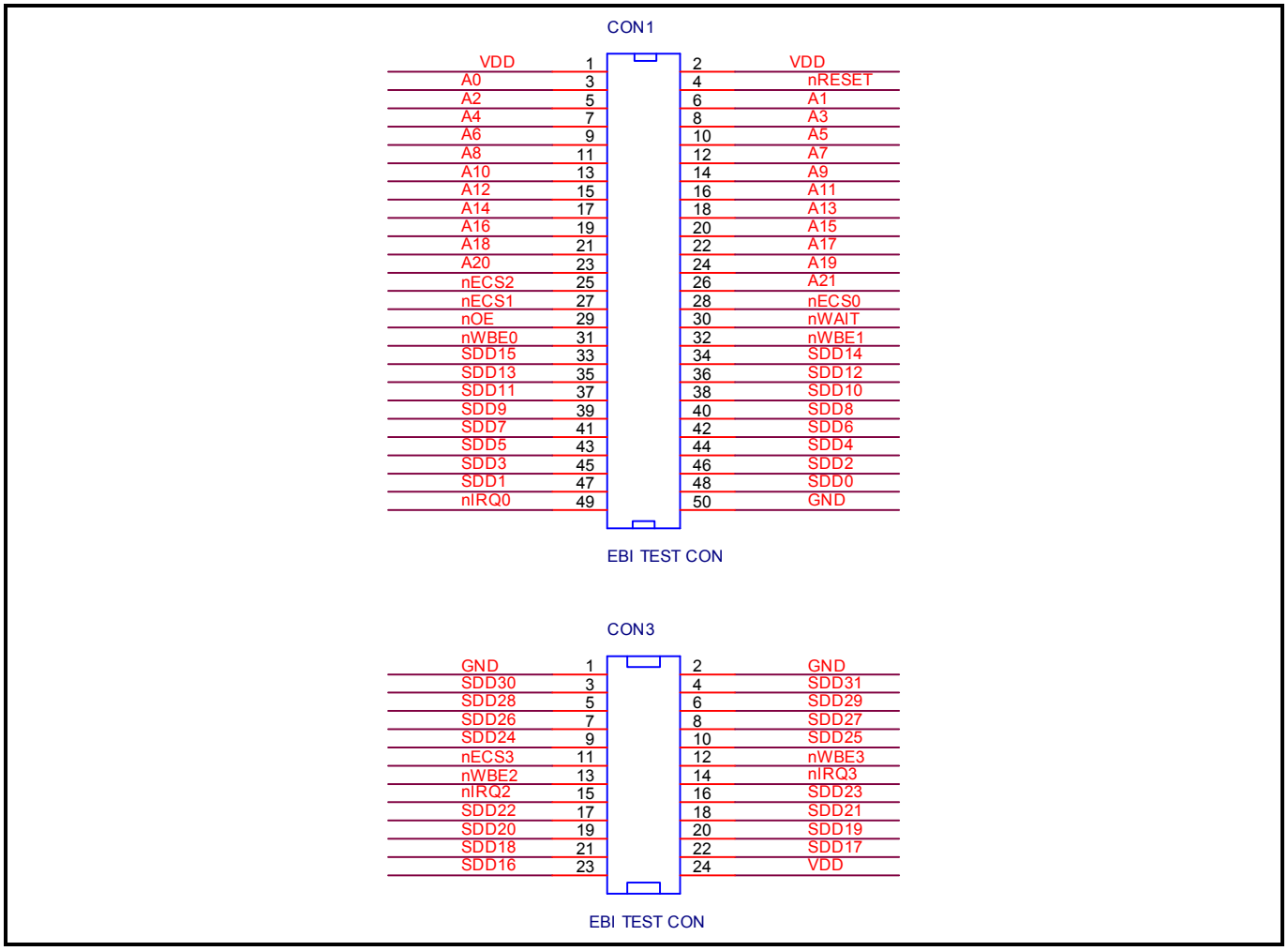

4.19 LED display

This board reserved LED display controlled by EBI bank0 for system development and testing. Please see the following schematic for more detail.

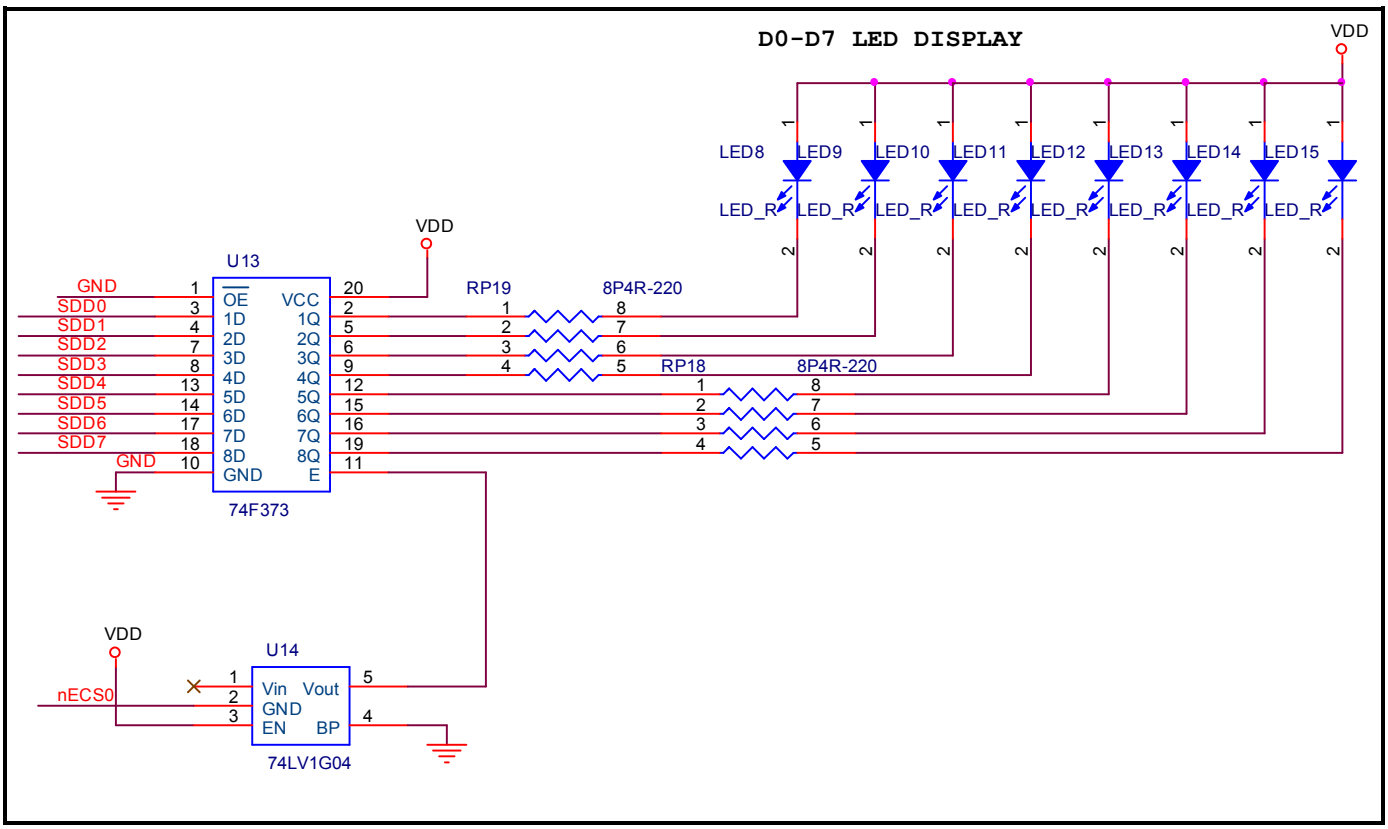

5 Schematic

5.1 Core Module board

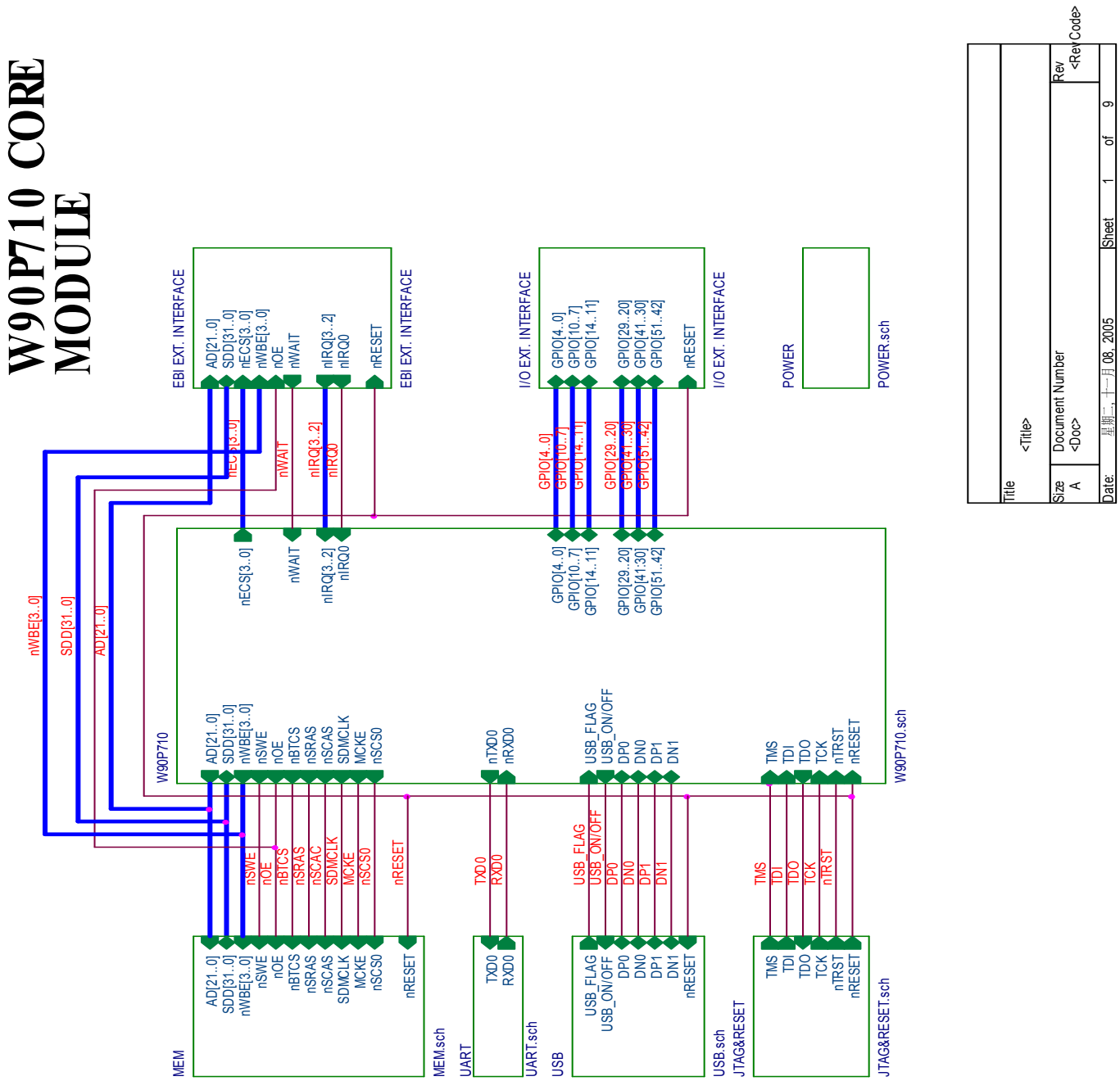

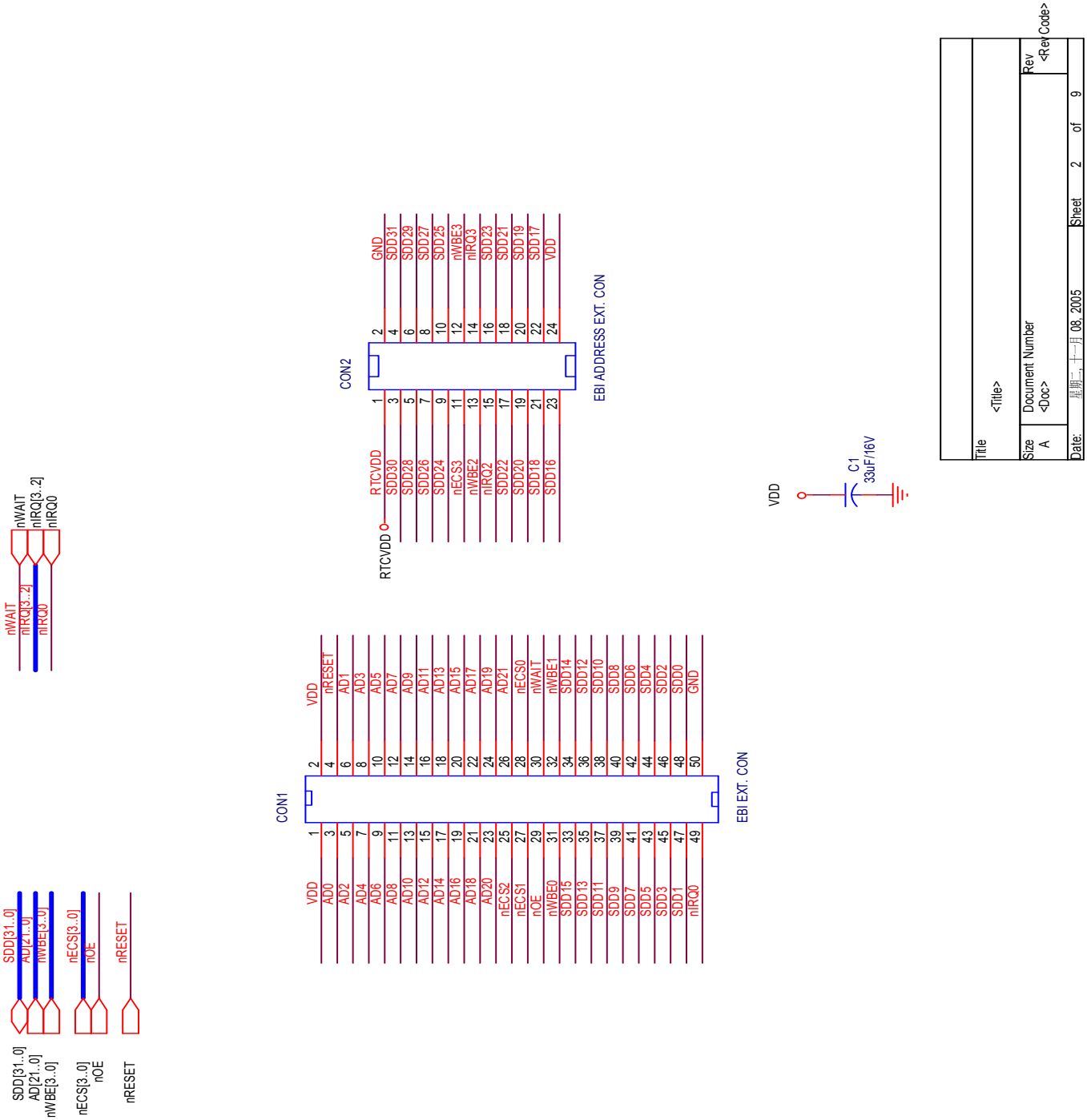
SDD[31..0]
AD[21..0]
nWBE[3..0]
nECS[3..0]
nOE
nRESET
nWAIT
nIRQ[3..2]
nIRQ0
CON1
VDD
AD0
AD2
AD4
AD6
AD8
AD10
AD12
AD14
AD16
AD18
AD20
nECS2
nECS1
nOE
nWBE0
SDD15
SDD13
SDD11
SDD9
SDD7
SDD5
SDD3
SDD1
nIRQ0
nRESET
AD1
AD3
AD5
AD7
AD9
AD11
AD13
AD15
AD17
AD19
AD21
nECS0
nWAIT
nWBE1
SDD14
SDD12
SDD10
SDD8
SDD6
SDD4
SDD2
SDD0
GND
EBI EXT. CON
CON2
RTCVDD
SDD30
SDD28
SDD26
SDD24
nECS3
nWBE2
nIRQ2
SDD22
SDD20
SDD18
SDD16
GND
SDD31
SDD29
SDD27
SDD25
nWBE3
nIRQ3
SDD23
SDD21
SDD19
SDD17
VDD
EBI ADDRESS EXT. CON
C1
33uF/16V
Title
<Title>
Size
A
Document Number
<Doc>
Rev
<Rev Code>
Date:
星期二, 十一月 08, 2005
Sheet
2
of
9

Winbond Electronics Corp.

32-Bit ARM7TDMI-based MCU

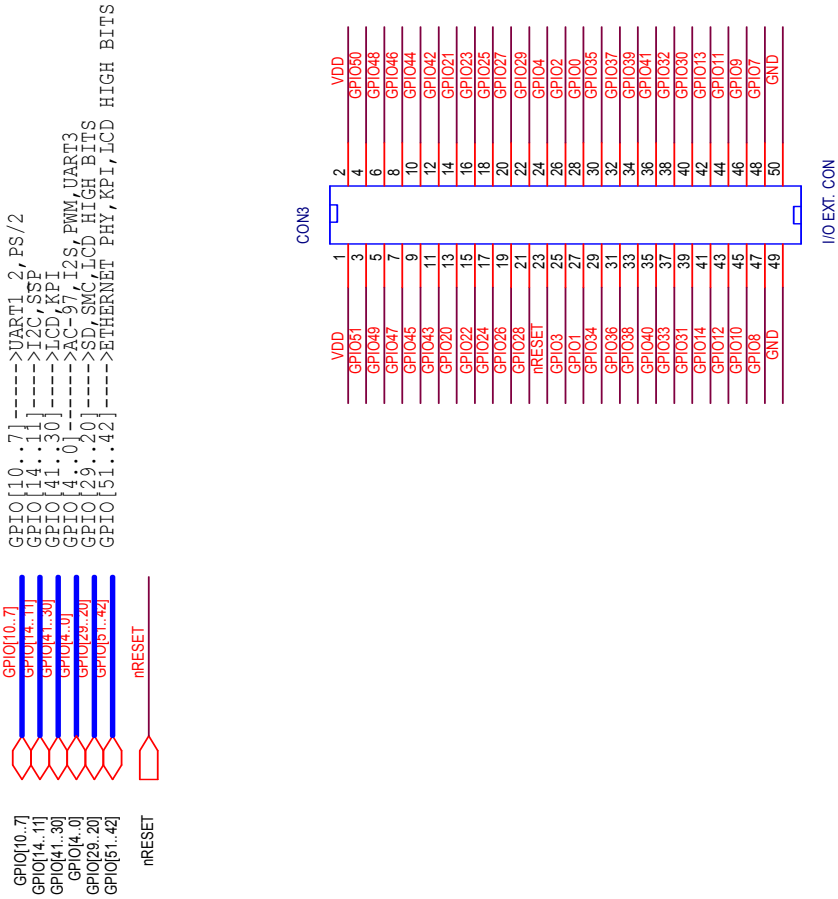

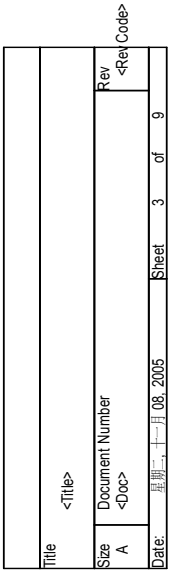

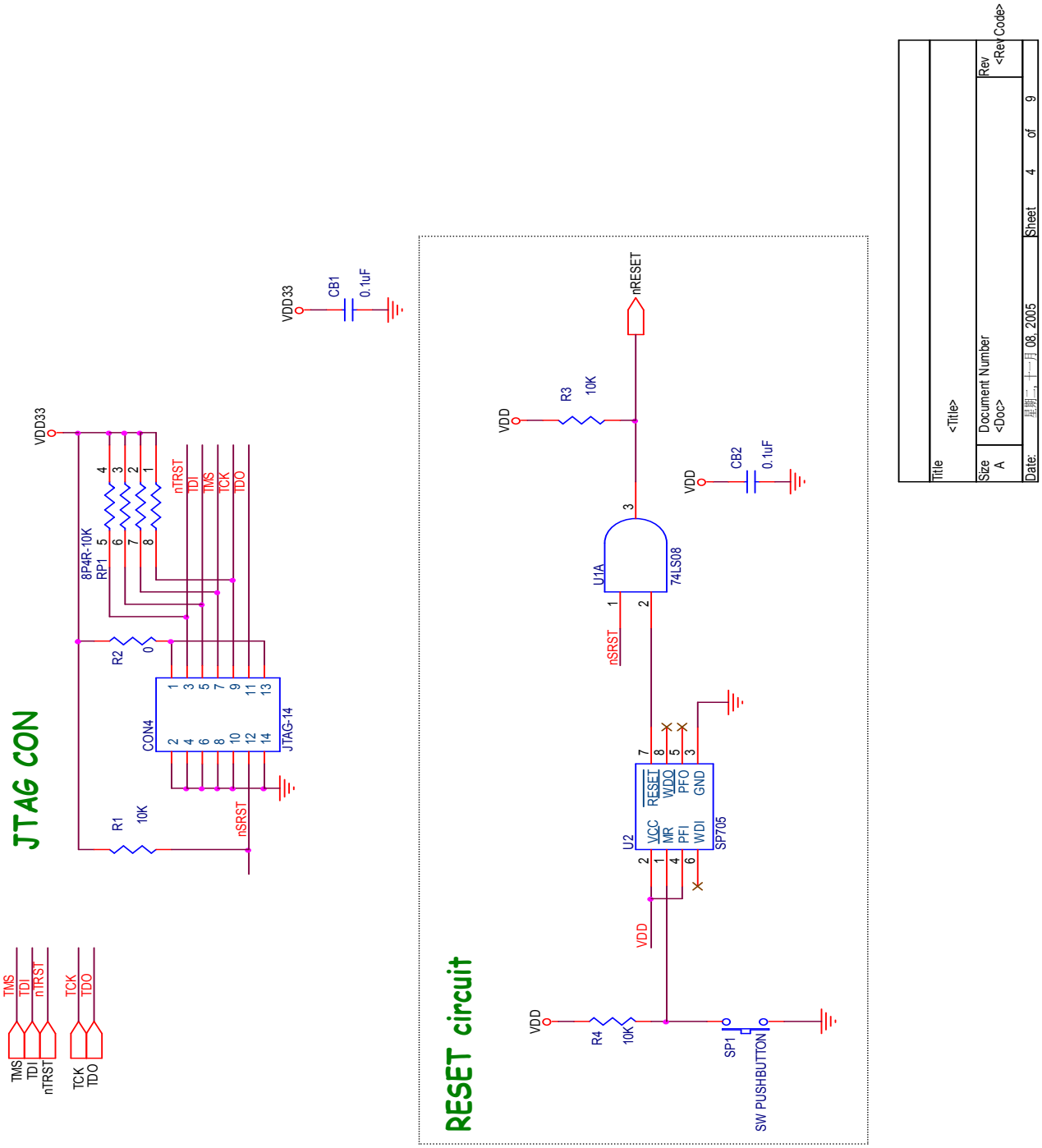
JTAG CON
RESET circuit
VDD33
CB1
0.1uF
8P4R-10K
RP1
R2
0
R1
10K
CON4
JTAG-14
nTRST
TDI
TMS
TCK
TDO
nSRST
TMS
TDI
nTRST
TCK
TDO
VDD
R3
10K
nRESET
U1A
74LS08
CB2
0.1uF
U2
SP705
VCC
MR
PFI
WDI
RESET
WDO
PFO
GND
R4
10K
SP1
SW PUSHBUTTON
Title
<Title>
Size
A
Document Number
<Doc>
Rev
<RevCode>
Date:
星期二, 十一月 08, 2005
Sheet
4
of
9

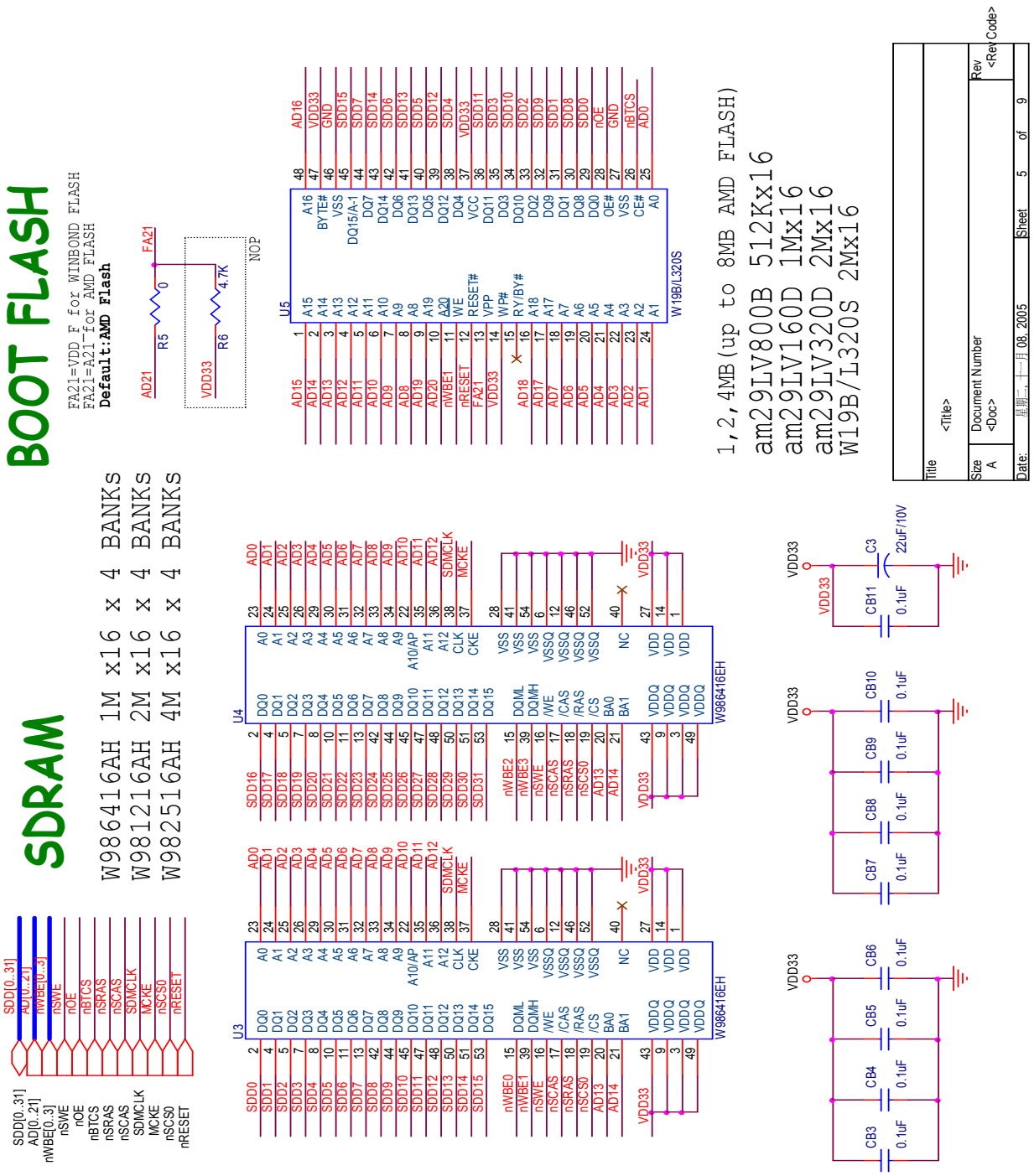
BOOT FLASH
FA21=VDD F for WINBOND FLASH
FA21=A21 for AMD FLASH
Default:AMD Flash
SDRAM
W986416AH 1M x16 x 4 BANKS
W981216AH 2M x16 x 4 BANKS
W982516AH 4M x16 x 4 BANKS
1,2,4MB(up to 8MB AMD FLASH)
am29LV800B 512Kx16
am29LV160D 1Mx16
am29LV320D 2Mx16
W19B/L320S 2Mx16
W986416EH
W19B/L320S
Title
Document Number
Sheet 5 of 9

Winbond Electronics Corp.

32-Bit ARM7TDMI-based MCU

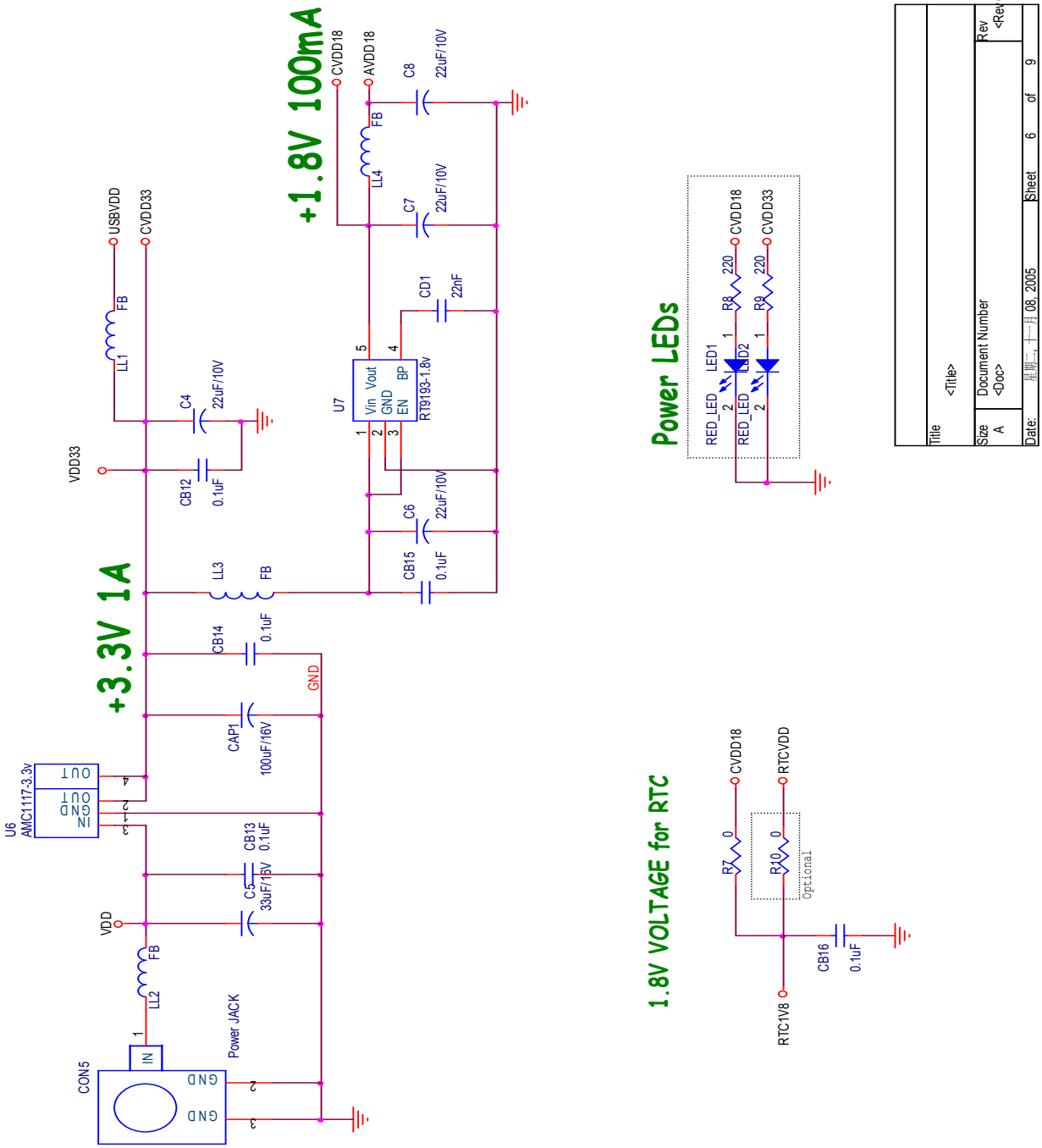

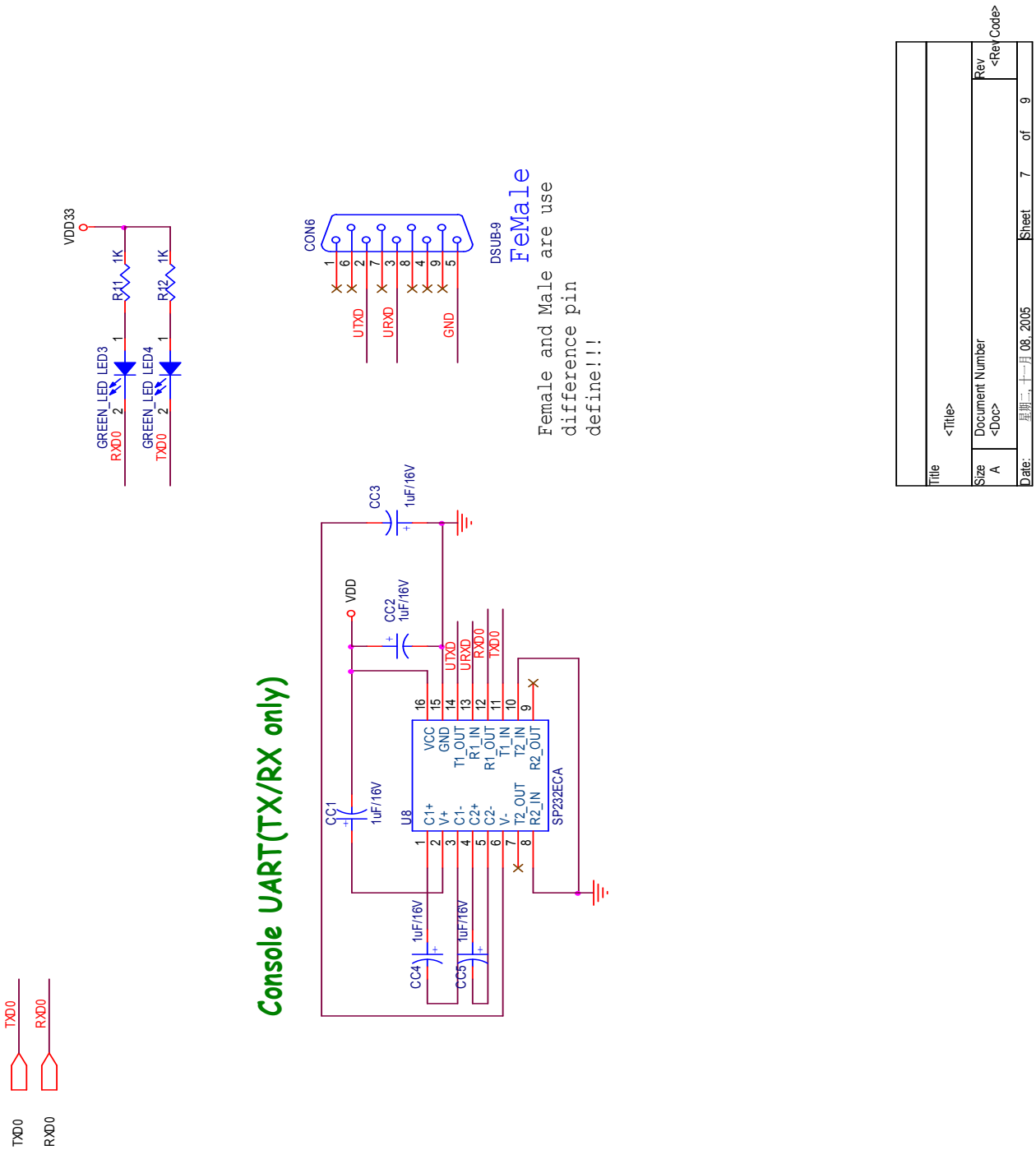
Console UART(TX/RX only)
VDD33
R11 1K
R12 1K
GREEN_LED LED3
GREEN_LED LED4
RXD0
TXD0
CON6
DSUB-9
UTXD
URXD
GND
FeMale
Female and Male are use
difference pin
define!!!
CC1 1uF/16V
CC2 1uF/16V
CC3 1uF/16V
CC4 1uF/16V
CC5 1uF/16V
VDD
U8
SP232ECA
VCC
GND
T1_OUT
R1_IN
R1_OUT
T1_IN
T2_IN
R2_OUT
C1+
V+
C1-
C2+
C2-
V-
T2_OUT
R2_IN
Title
<Title>
Size
A
Document Number
<Doc>
Rev
<Rev Code>
Date:
Sheet 7 of 9

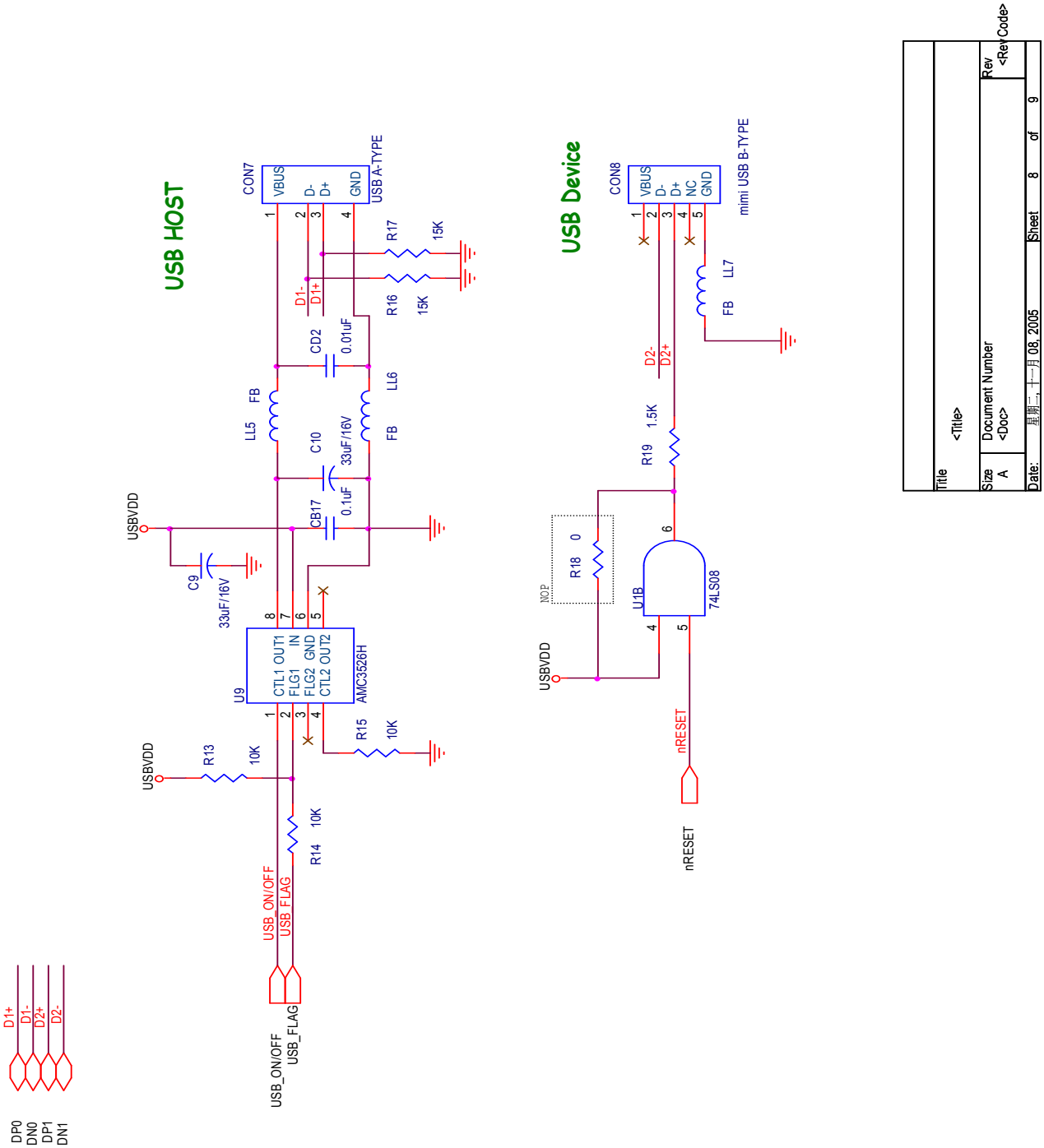
USB HOST
CON7
VBUS
D-
D+
GND
USB A-TYPE
R17
15K
R16
15K
D1-
D1+
CD2
0.01uF
LL5
FB
C10
33uF/16V
LL6
FB
CB17
0.1uF
USBVDD
C9
33uF/16V
U9
CTL1 OUT1
FLG1 IN
FLG2 GND
CTL2 OUT2
AMC3526H
R15
10K
USBVDD
R13
10K
R14
10K
USB_ON/OFF
USB_FLAG
USB_ON/OFF
USB_FLAG
D1+
D1-
D2+
D2-
DP0
DN0
DP1
DN1
USB Device
CON8
VBUS
D-
D+
NC
GND
mimi USB B-TYPE
LL7
FB
D2-
D2+
R19
1.5K
NOP
R18
0
U1B
74LS08
USBVDD
nRESET
nRESET
Title
<Title>
Size
A
Document Number
<Doc>
Rev
<RevCode>
Date:
星期二, 十一月 08, 2005
Sheet
8
of
9

Winbond Electronics Corp.

32-Bit ARM7TDMI-based MCU

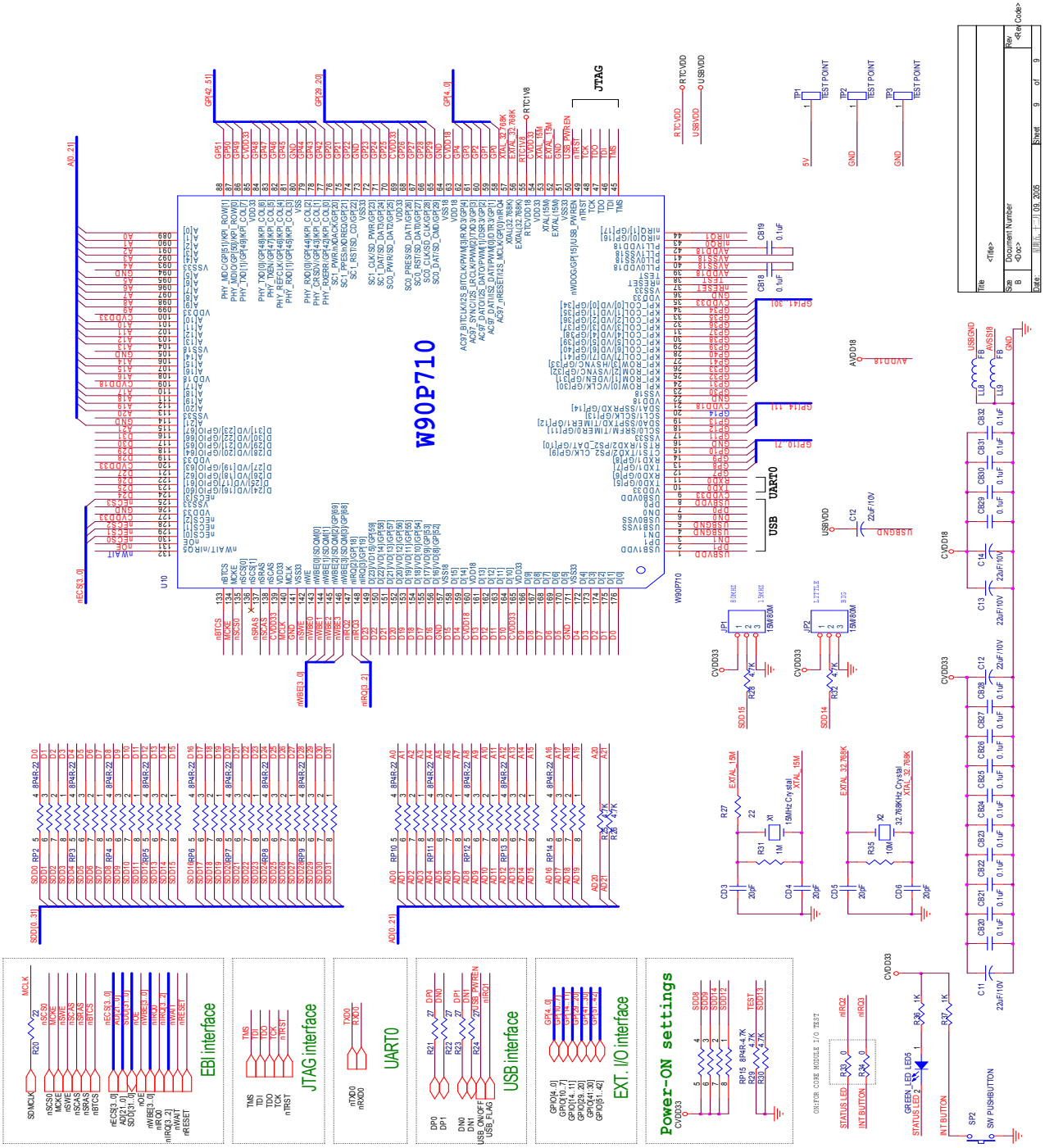

5.2 Application board

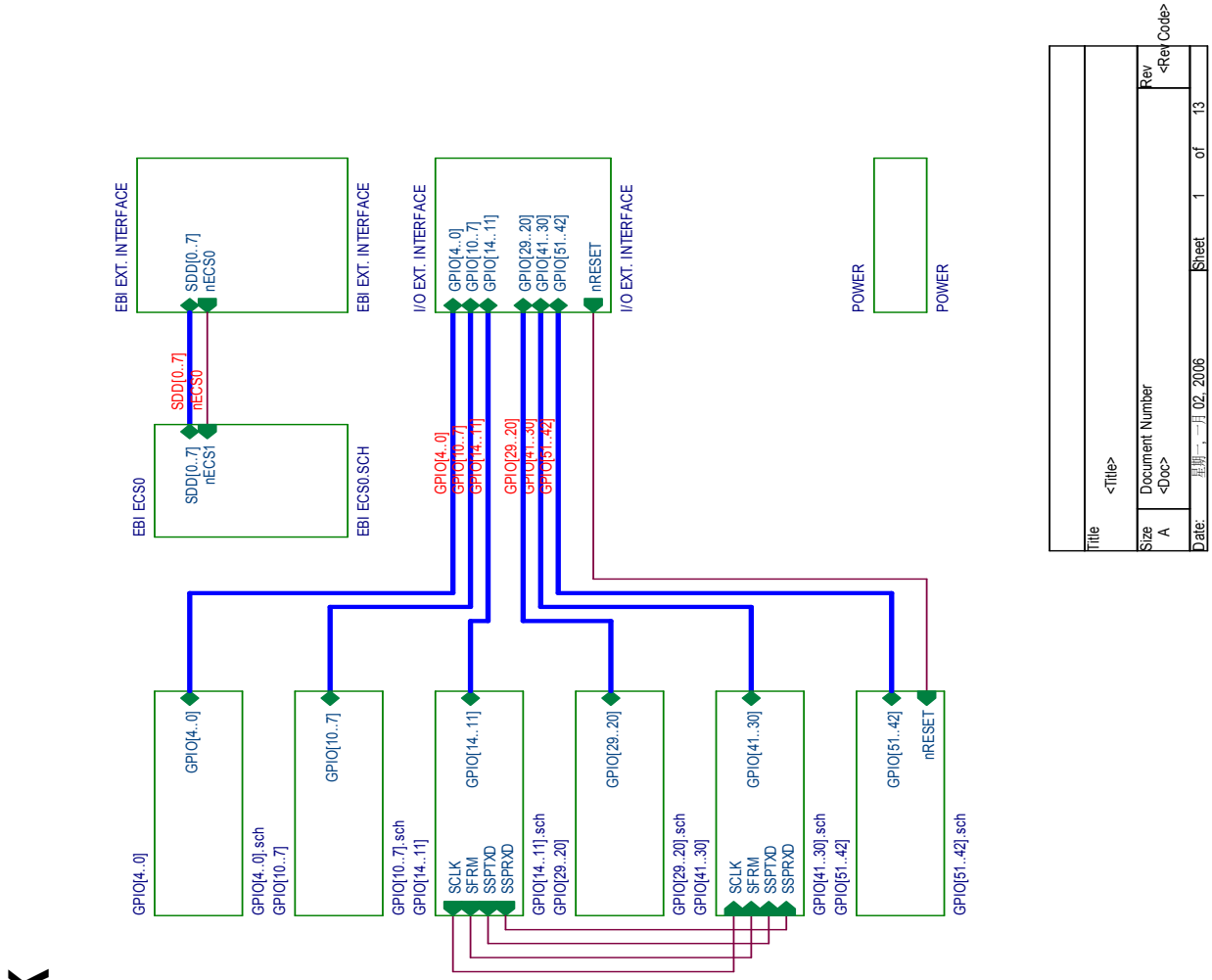

FUNCTION BLOCK

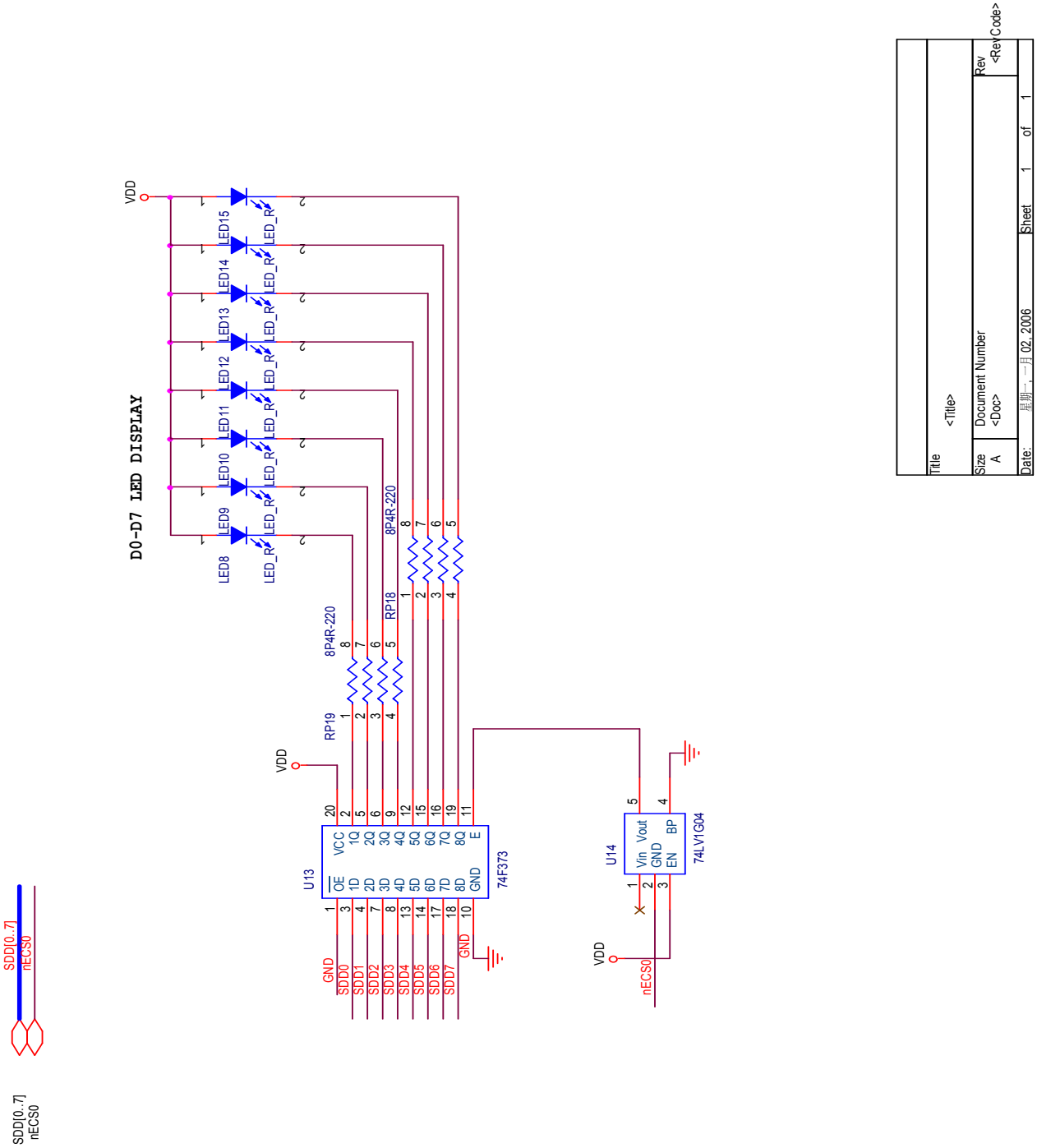
D0-D7 LED DISPLAY
VDD
LED8
LED9
LED10
LED11
LED12
LED13
LED14
LED15
LED_R
8P4R-220
RP18
RP19
U13
74F373
U14
74LV1G04
GND
SDD0
SDD1
SDD2
SDD3
SDD4
SDD5
SDD6
SDD7
nECS0
SDD[0..7]
Title
<Title>
Size
A
Document Number
<Doc>
Rev
<RevCode>
Date:
Sheet
of

Winbond Electronics Corp.

32-Bit ARM7TDMI-based MCU

EBI EXT. CONNECTOR

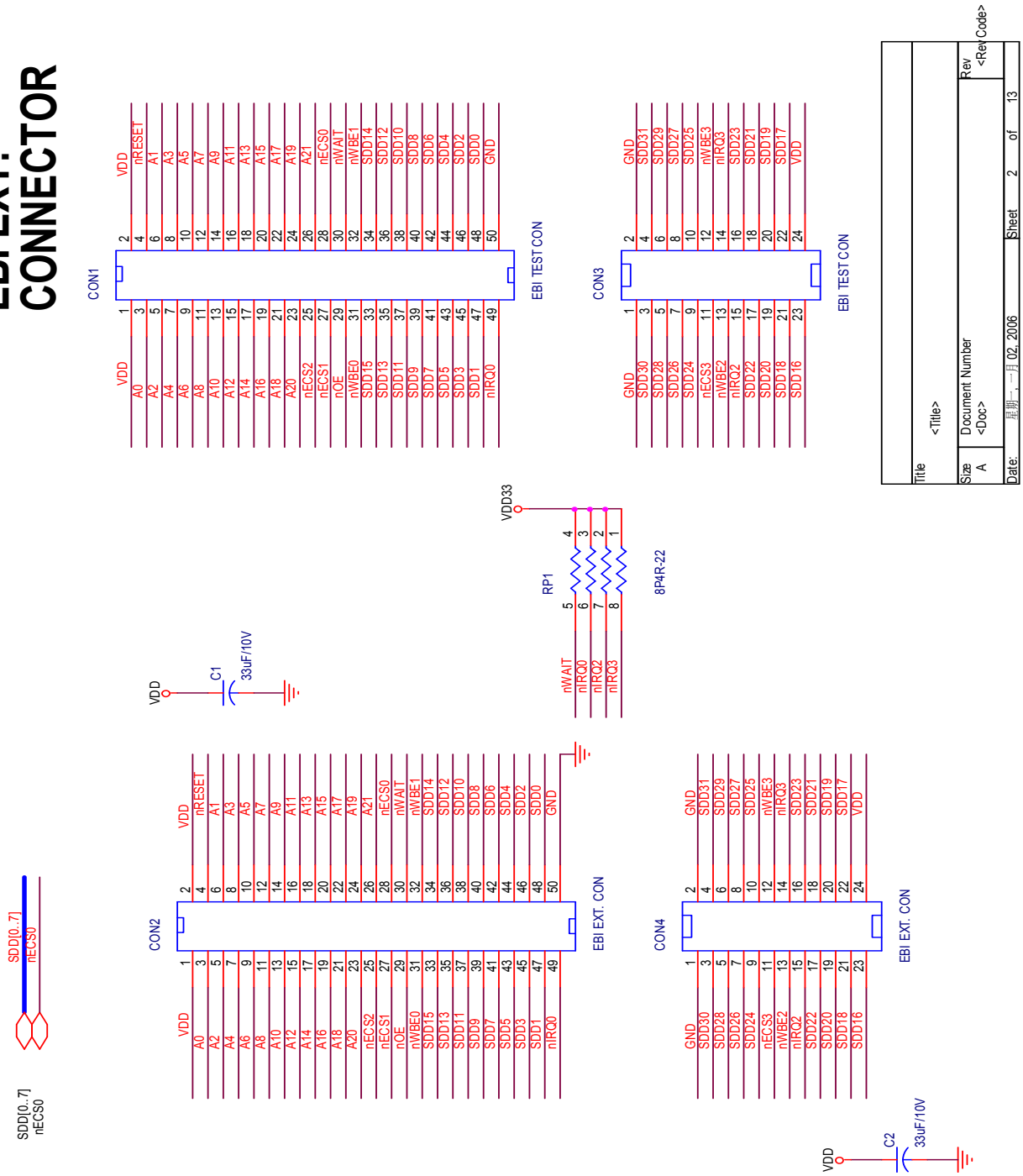

Winbond Electronics Corp.

32-Bit ARM7TDMI-based MCU

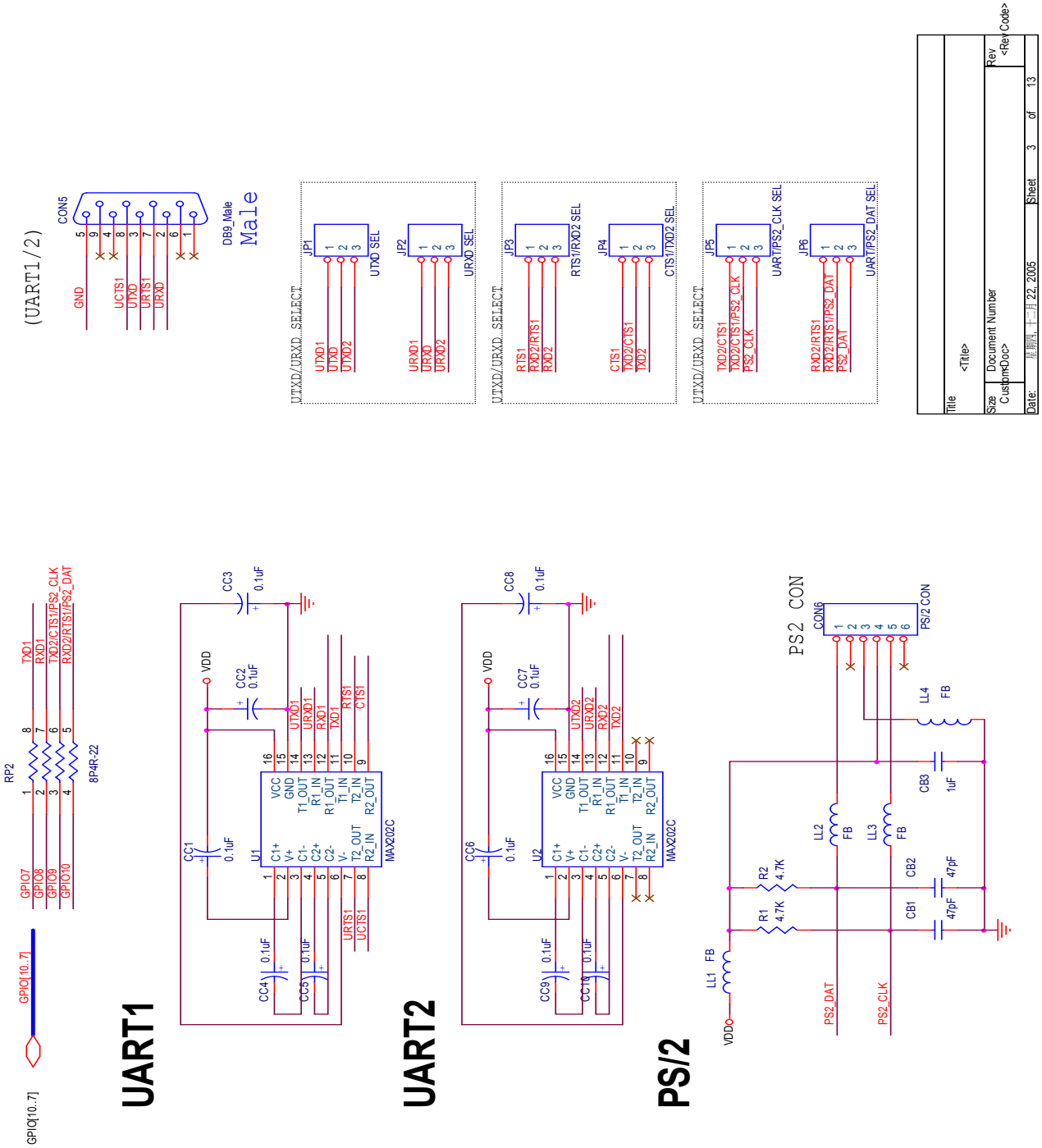

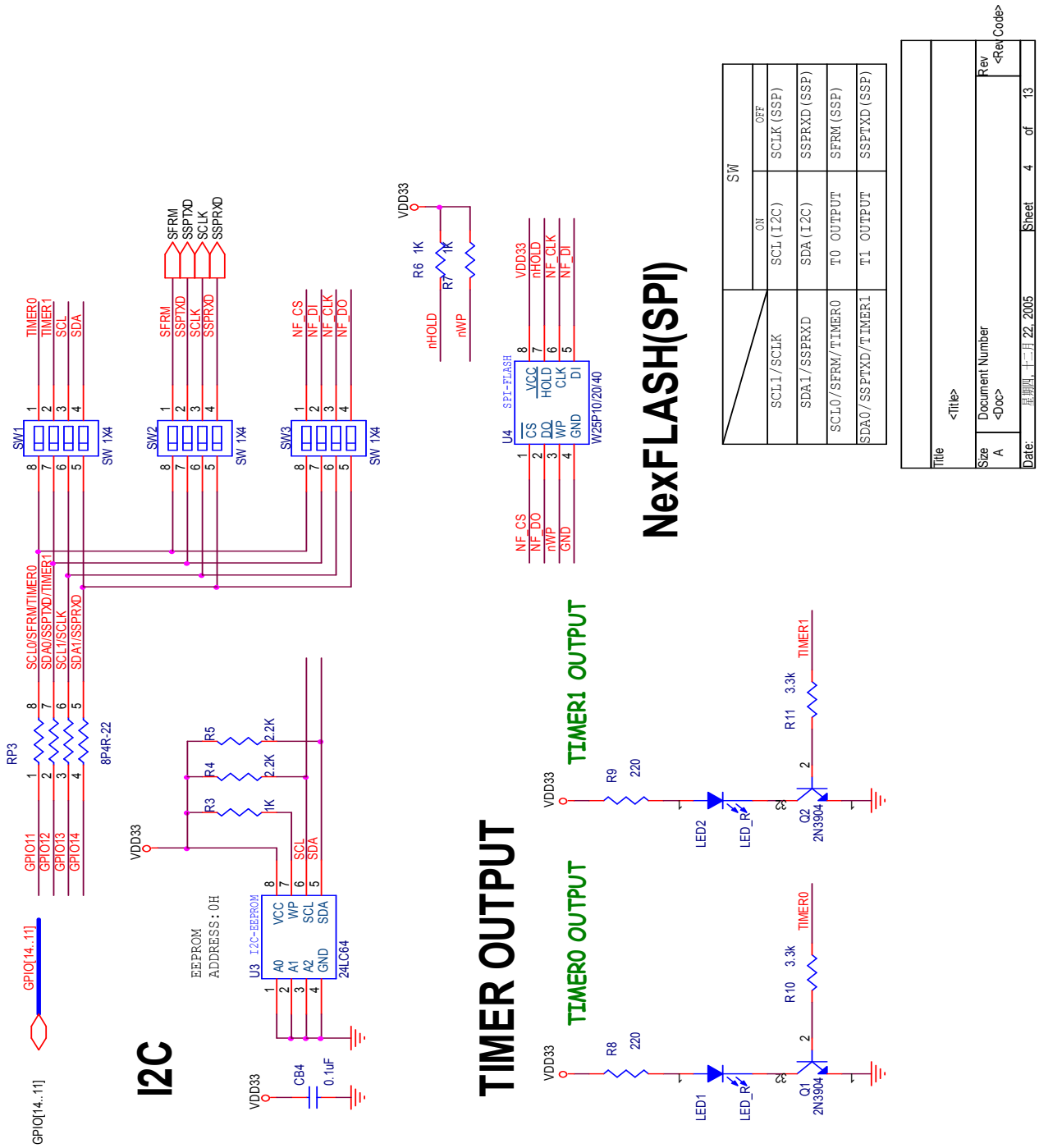
I2C
TIMER OUTPUT
TIMER0 OUTPUT
TIMER1 OUTPUT
NexFLASH(SPI)
GPIO[14..11]
RP3
8P4R-22
SCL0/SFRM/TIMER0
SDA0/SSPTXD/TIMER1
SCL1/SCLK
SDA1/SSPRXD
GPIO11
GPIO12
GPIO13
GPIO14
SW1
SW2
SW3
SW 1X4
TIMER0
TIMER1
SCL
SDA
SFRM
SSPTXD
SCLK
SSPRXD
NF_CS
NF_DI
NF_CLK
NF_DO
VDD33
R6 1K
R7 1K
nHOLD
nWP
U4 SPI-FLASH
W25P10/20/40
VCC
HOLD
CLK
DI
WP
GND
U3 I2C-EEPROM
24LC64
EEPROM
ADDRESS:0H
A0
A1
A2
R3 1K
R4 2.2K
R5 2.2K
CB4 0.1uF
R8 220
R9 220
R10 3.3k
R11 3.3k
LED1
LED2
LED_R
Q1 2N3904
Q2 2N3904
SW
ON
OFF
SCL1/SCLK
SCL(I2C)
SCLK(SSP)
SDA1/SSPRXD
SDA(I2C)
SSPRXD(SSP)
SCL0/SFRM/TIMER0
T0 OUTPUT
SFRM(SSP)
SDA0/SSPTXD/TIMER1
T1 OUTPUT
SSPTXD(SSP)
Title
<Title>
Size
A
Document Number
<Doc>
Rev
<Rev Code>
Date:
星期四, 十二月 22, 2005
Sheet 4 of 13

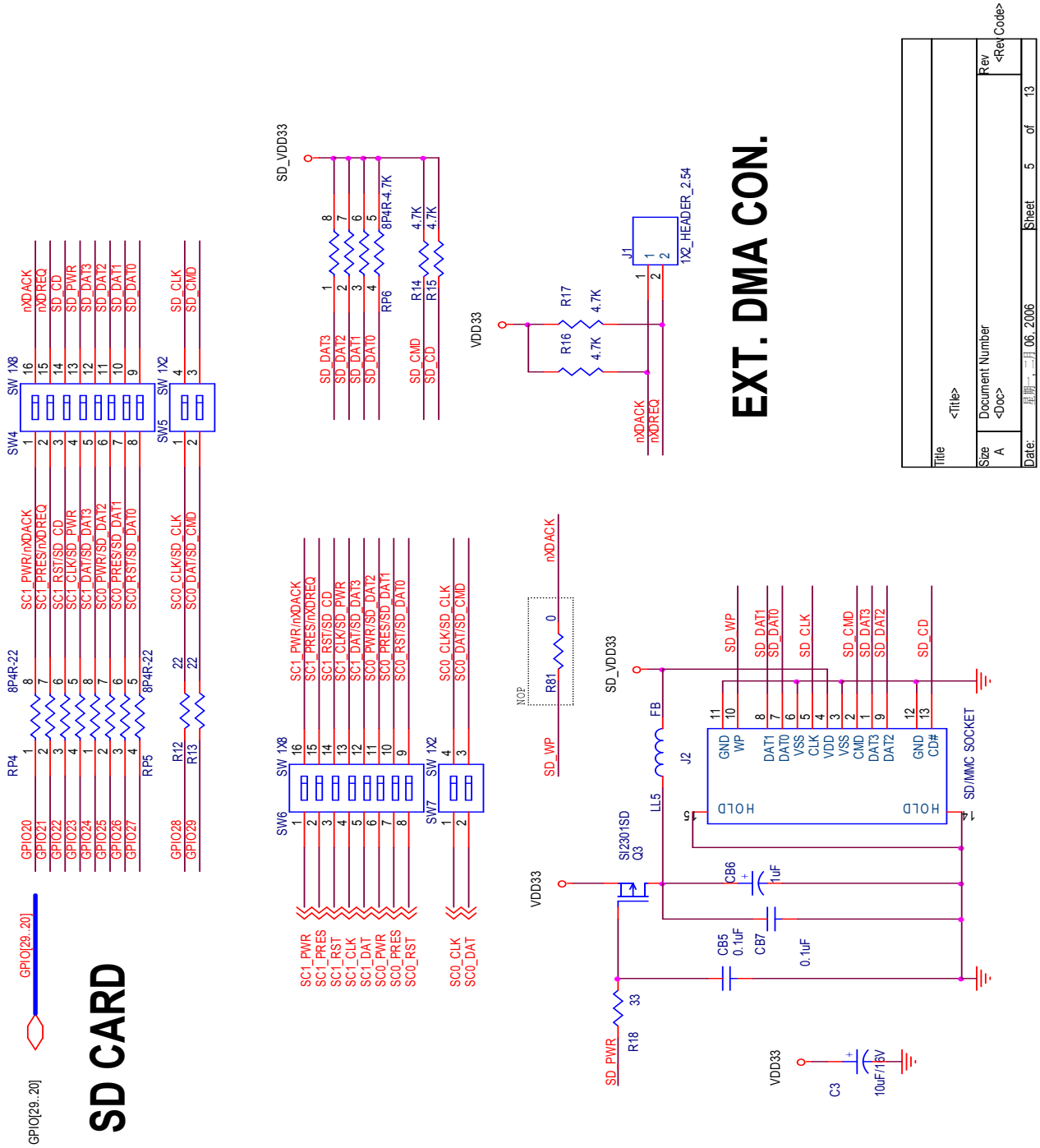
SD CARD
EXT. DMA CON.
GPIO[29..20]
GPIO[29..20]
RP4
8P4R-22
RP5
8P4R-22
SW4
SW 1X8
SW5
SW 1X2
SW6
SW 1X8
SW7
SW 1X2
SD_VDD33
RP6
8P4R-4.7K
R14
4.7K
R15
4.7K
VDD33
R16
4.7K
R17
4.7K
J1
1X2_HEADER_2.54
R81
0
NOP
SD_VDD33
J2
SD/MMC SOCKET
Q3
SI2301SD
LL5
FB
CB6
1uF
CB5
0.1uF
CB7
0.1uF
R18
33
C3
10uF/16V
Title
Document Number
Rev
Size
A
Date:
Sheet
5
of
13

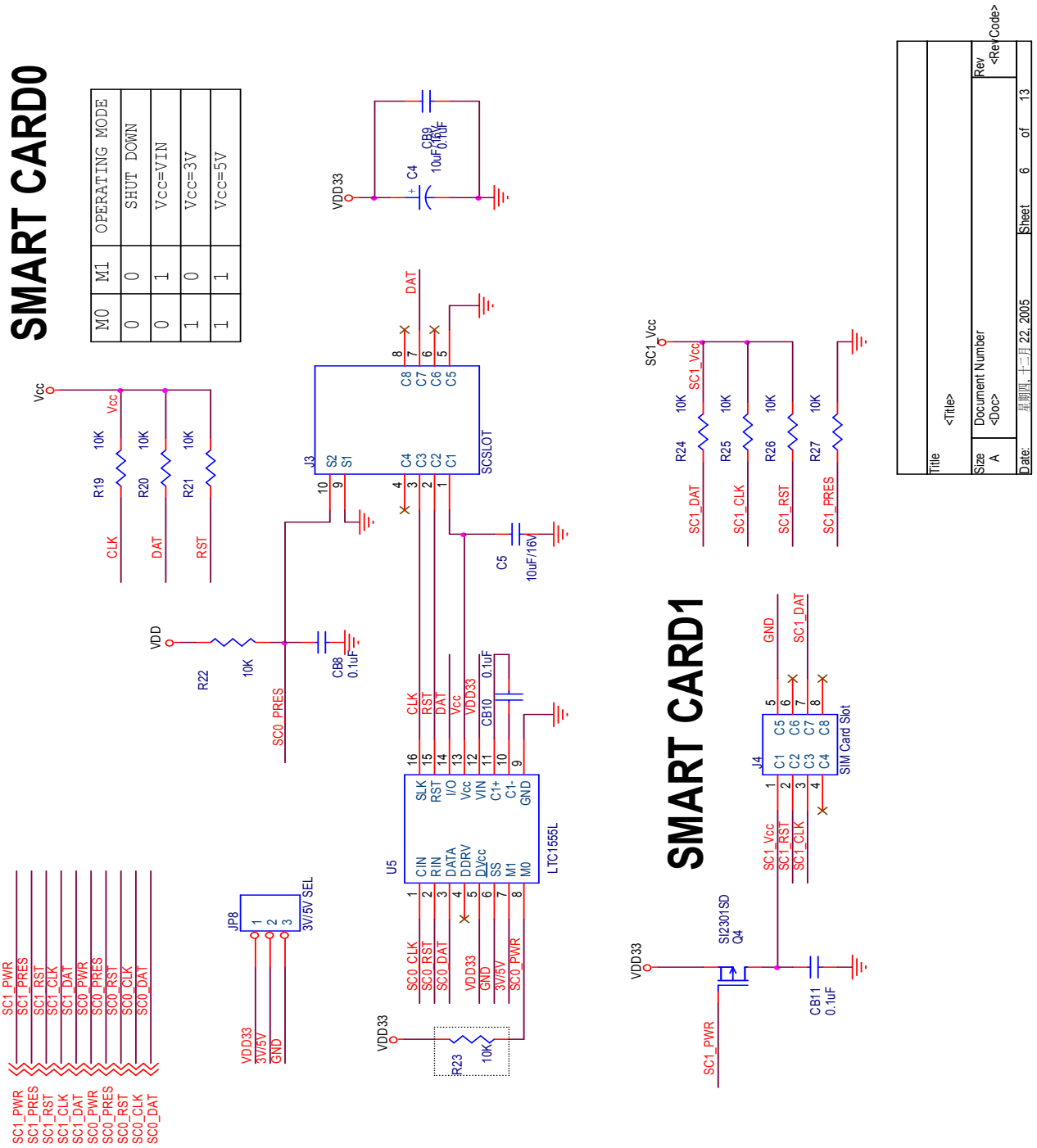
SMART CARD0
M0 M1 OPERATING MODE
0 0 SHUT DOWN
0 1 Vcc=VIN
1 0 Vcc=3V
1 1 Vcc=5V
SMART CARD1
SC1_PWR
SC1_PRES
SC1_RST
SC1_CLK
SC1_DAT
SC0_PWR
SC0_PRES
SC0_RST
SC0_CLK
SC0_DAT
JP8
3V/5V SEL
VDD33
3V/5V
GND
U5
LTC1555L
J3
SCSLOT
J4
SIM Card Slot
Q4
SI2301SD
R19 10K
R20 10K
R21 10K
R22 10K
R23 10K
R24 10K
R25 10K
R26 10K
R27 10K
CB8 0.1uF
CB9 0.1uF
CB10 0.1uF
CB11 0.1uF
C4 10uF/16V
C5 10uF/16V
Title
<Title>
Size A
Document Number
<Doc>
Rev
<RevCode>
Date: 星期四, 十二月 22, 2005
Sheet 6 of 13

Winbond Electronics Corp.

32-Bit ARM7TDMI-based MCU

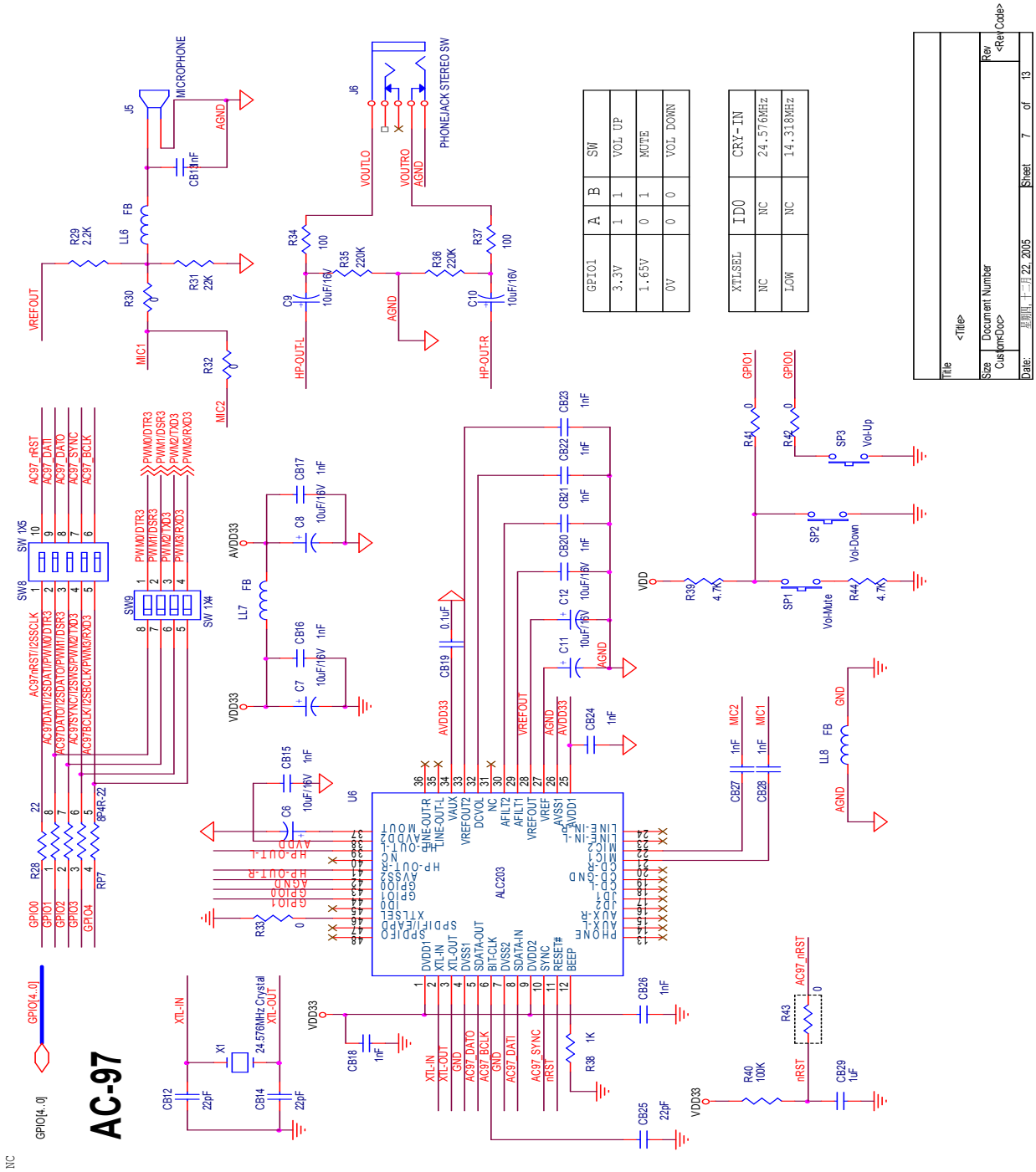

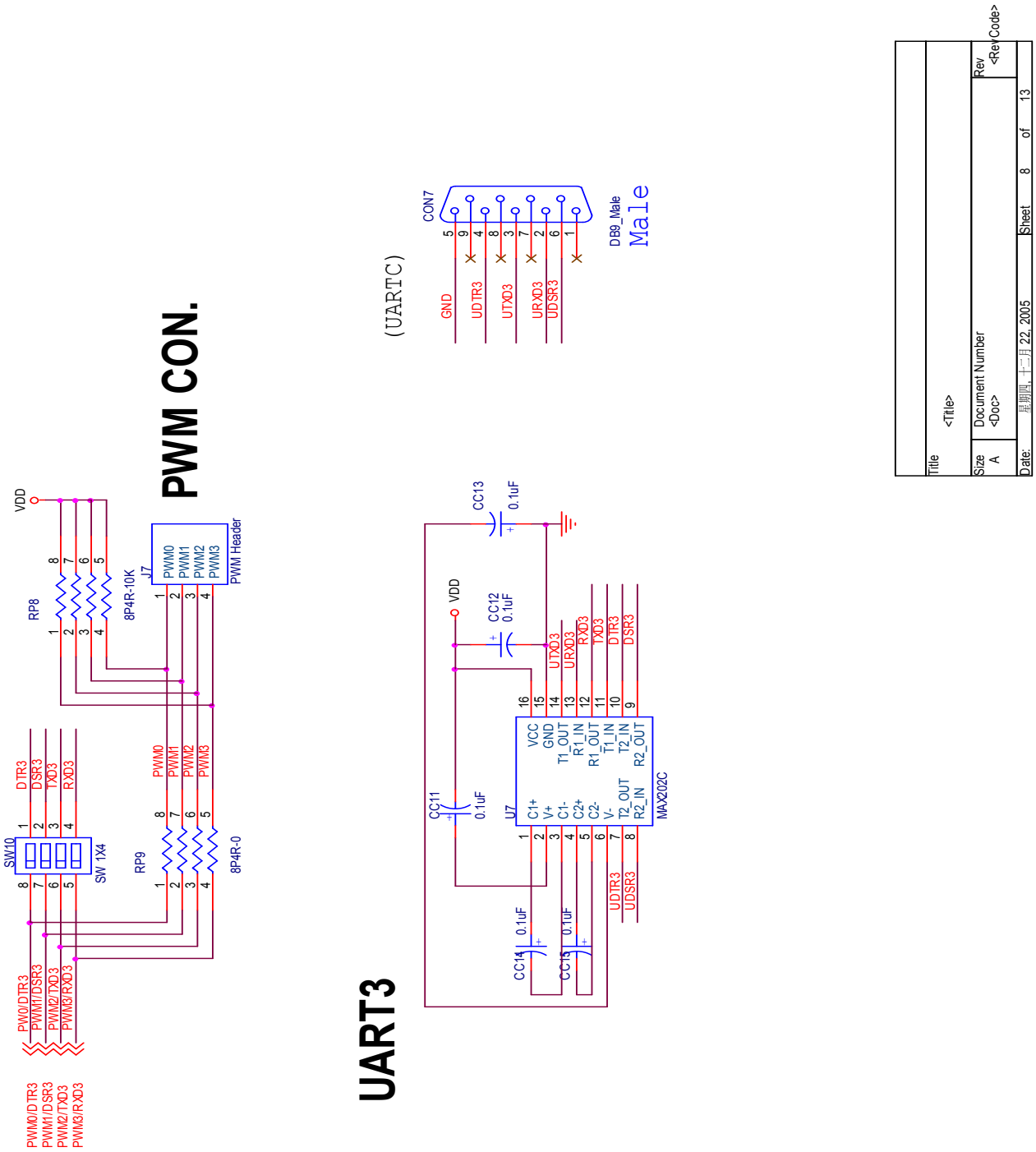
PWM CON.
VDD
RP8
8P4R-10K
J7
PWM0
PWM1
PWM2
PWM3
PWM Header
SW10
SW 1X4
DTR3
DSR3
TXD3
RXD3
RP9
8P4R-0
PW0/DTR3
PWM1/DSR3
PWM2/TXD3
PWM3/RXD3
PWM0/DTR3
PWM1/DSR3
PWM2/TXD3
PWM3/RXD3
UART3
(UARTC)
CON7
GND
UDTR3
UTXD3
URXD3
UDSR3
DB9_Male
Male
CC13
0.1uF
CC12
0.1uF
CC11
0.1uF
CC14
0.1uF
CC15
0.1uF
U7
VCC
GND
T1_OUT
R1_IN
R1_OUT
T1_IN
T2_IN
R2_OUT
C1+
V+
C1-
C2+
C2-
V-
T2_OUT
R2_IN
MAX202C
UTXD3
URXD3
RXD3
TXD3
DTR3
DSR3
UDTR3
UDSR3
Title
<Title>
Size
A
Document Number
<Doc>
Rev
<RevCode>
Date:
星期四, 十二月 22, 2005
Sheet
8
of
13

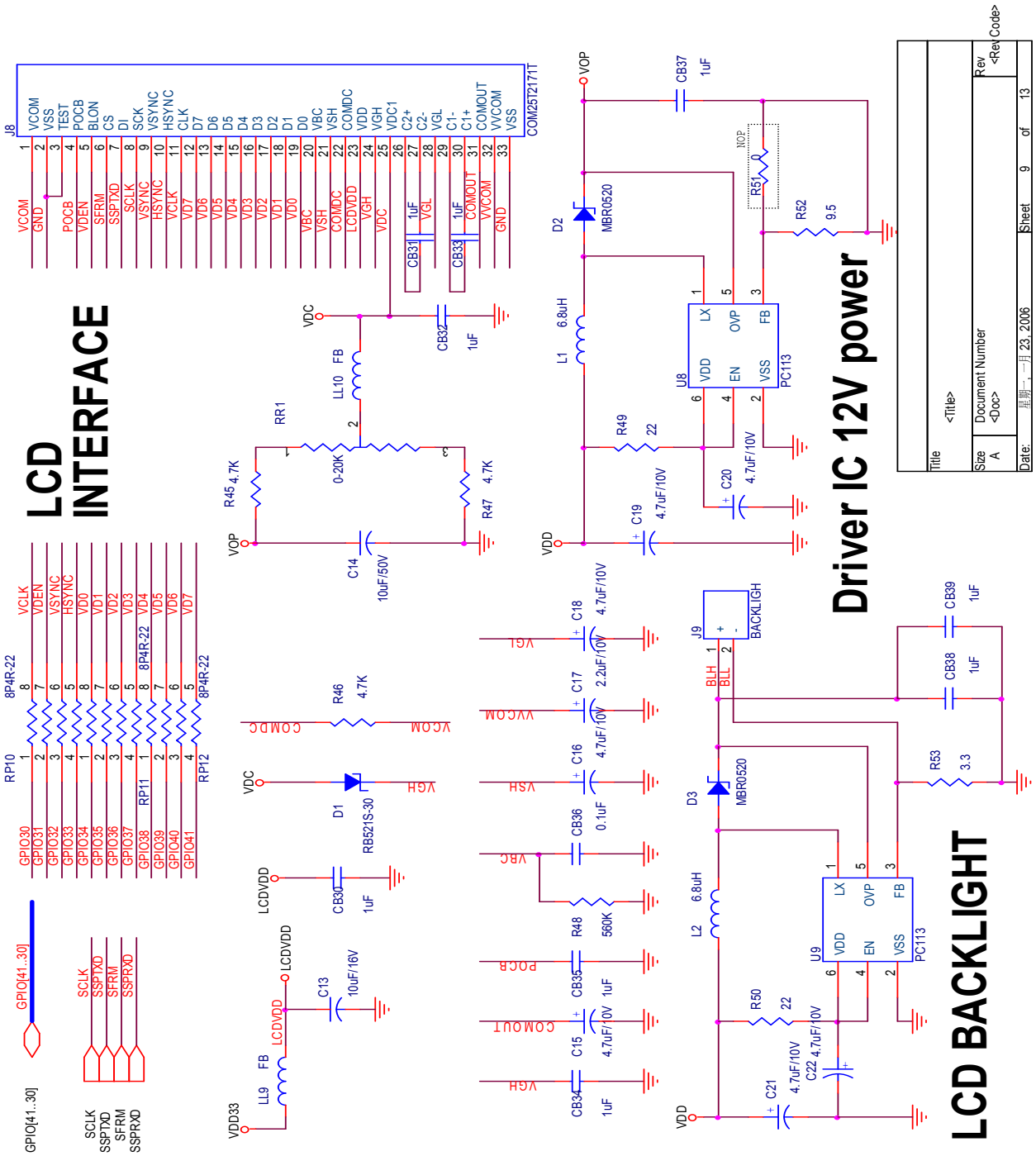
LCD INTERFACE
Driver IC 12V power
LCD BACKLIGHT
J8
COM25T2171T
RR1
0-20K
LL10 FB
R45 4.7K
R47 4.7K
C14 10uF/50V
CB32 1uF
CB31 1uF
CB33 1uF
RP10 8P4R-22
RP11 8P4R-22
RP12 8P4R-22
R46 4.7K
D1 RB521S-30
CB30 1uF
C13 10uF/16V
LL9 FB
GPIO[41..30]
SCLK SSPTXD SFRM SSPRXD
D2 MBR0520
L1 6.8uH
U8 PC113
R49 22
C19 4.7uF/10V
C20 4.7uF/10V
R51 0
R52 9.5
CB37 1uF
C18 4.7uF/10V
C17 2.2uF/10V
C16 4.7uF/10V
CB36 0.1uF
R48 560K
CB35 1uF
C15 4.7uF/10V
CB34 1uF
J9 BACKLIGH
D3 MBR0520
L2 6.8uH
U9 PC113
R50 22
C21 4.7uF/10V
C22 4.7uF/10V
CB39 1uF
CB38 1uF
R53 3.3
Title
Size A
Document Number
Rev
Date: 星期一, 一月 23, 2006
Sheet 9 of 13

Winbond Electronics Corp.

32-Bit ARM7TDMI-based MCU

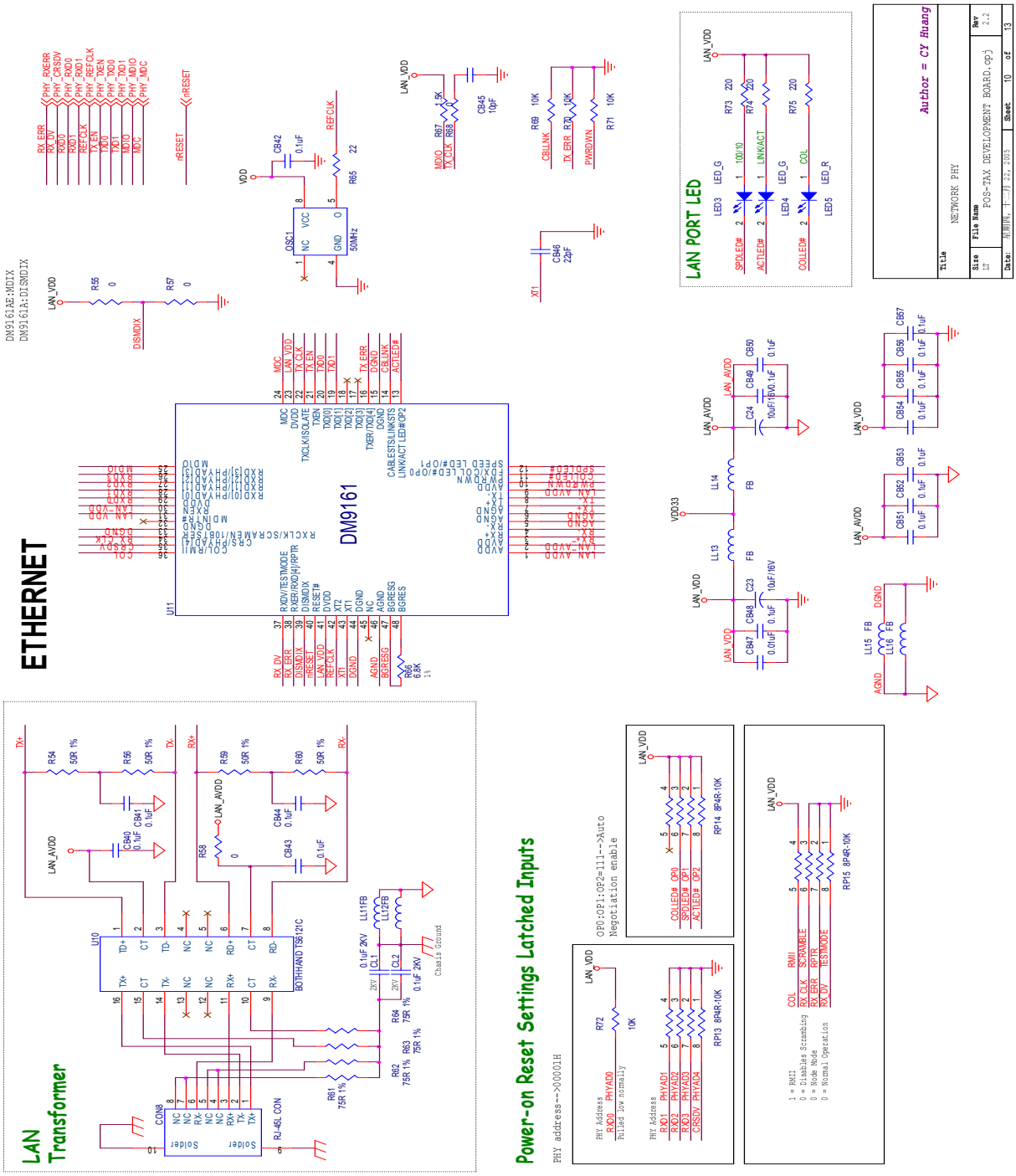

Winbond Electronics Corp.

32-Bit ARM7TDMI-based MCU

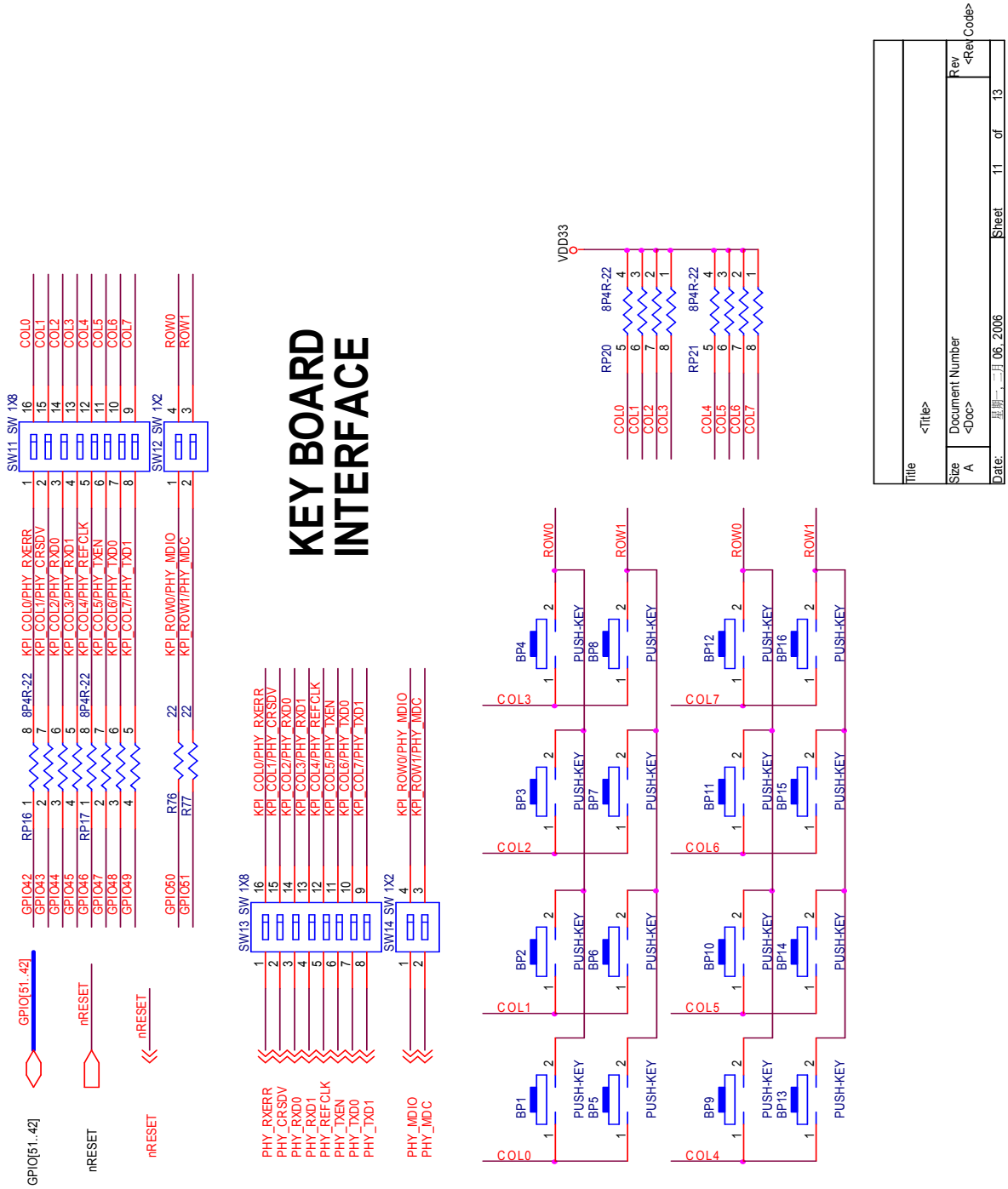

Winbond Electronics Corp.

32-Bit ARM7TDMI-based MCU

I/O EXT. CONNECTOR

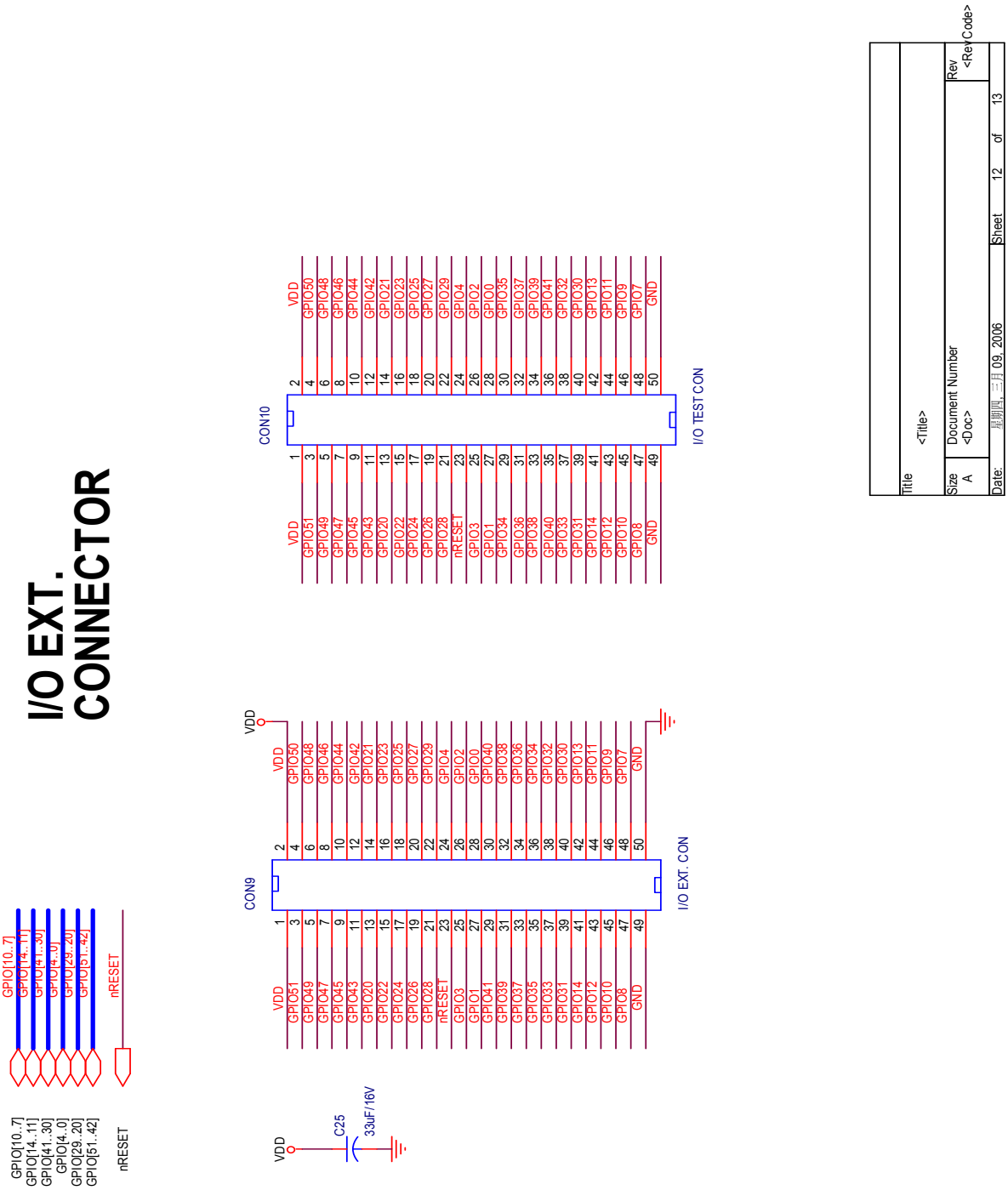

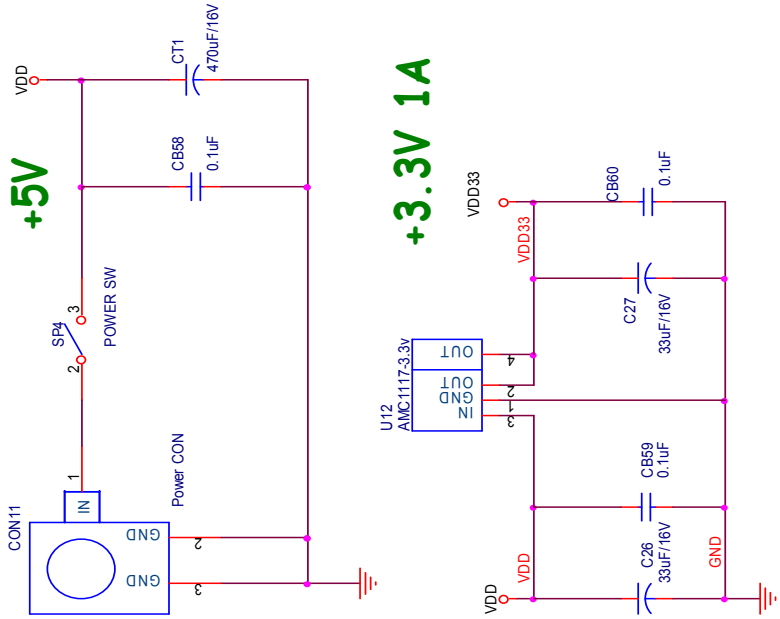
+5V
VDD
CT1
470uF/16V
CB58
0.1uF
SP4
POWER SW
CON11
IN
GND
GND
Power CON
+3.3V 1A
VDD33
CB60
0.1uF
C27
33uF/16V
U12
AMC1117-3.3v
IN
GND
OUT
OUT
CB59
0.1uF
C26
33uF/16V
VDD
GND

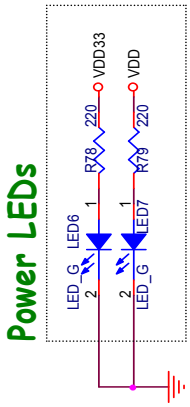
Power LEDs
LED_G
LED6
R78
220
VDD33
LED_G
LED7
R79
220
VDD

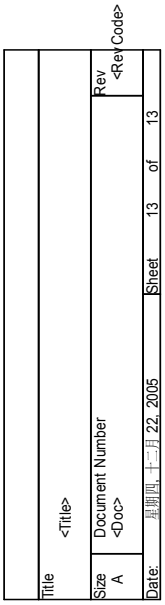
Title
<Title>
Size
A
Document Number
<Doc>
Rev
<RevCode>
Date:
星期四, 十二月 22, 2005
Sheet
13
of
13

5.3 AUO TFT panel board

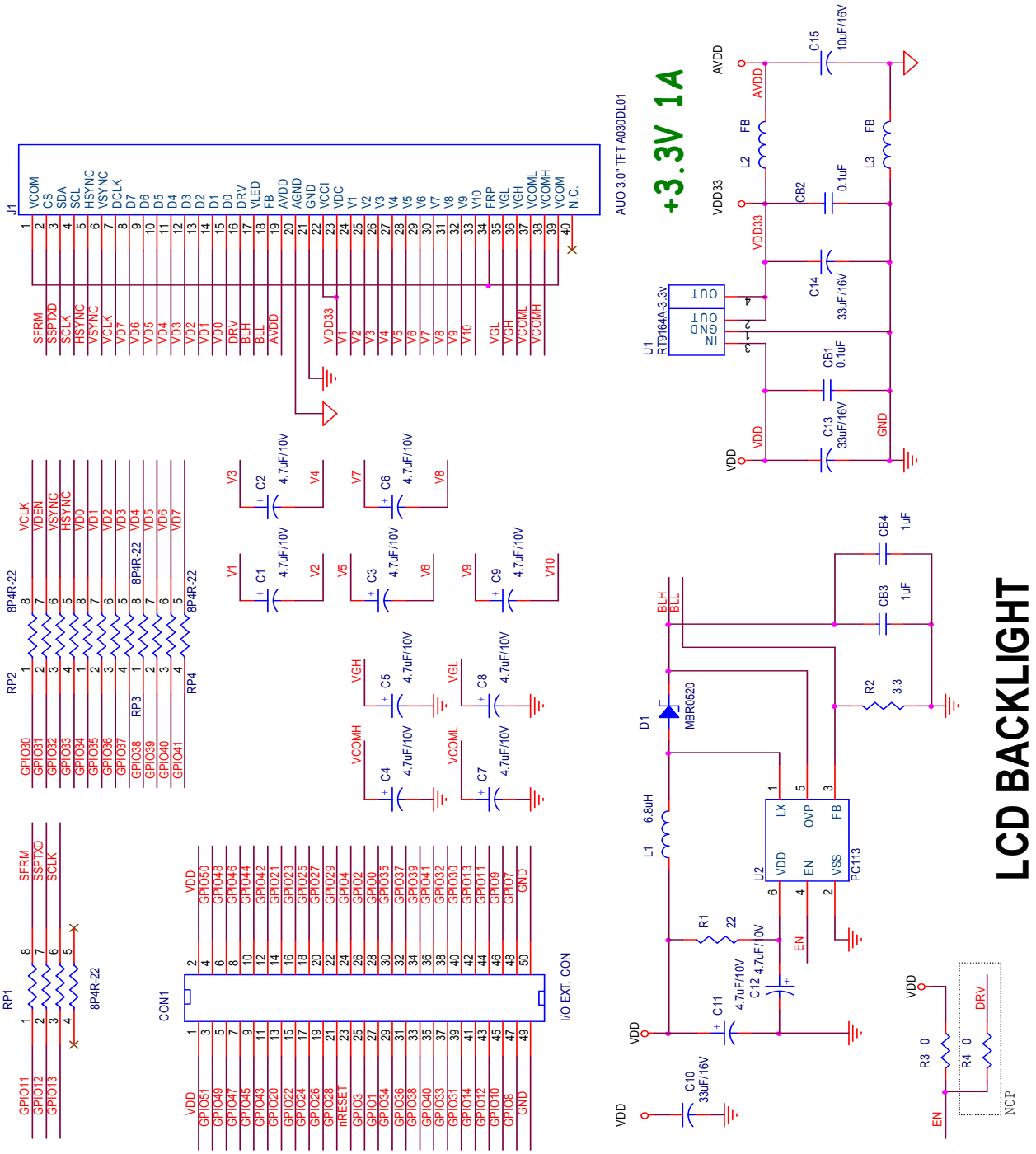

6 BOM List

6.1 Core Module board

Bill of Materials January 10, 2006 18:16:18 Page1

Item	Quantity	Reference	Part
1	1	CAP1	100uF/16V
2	32	CB1,CB2,CB3,CB4,CB5,CB6, CB7,CB8,CB9,CB10,CB11, CB12,CB13,CB14,CB15,CB16, CB17,CB18,CB19,CB20,CB21, CB22,CB23,CB24,CB25,CB26, CB27,CB28,CB29,CB30,CB31, CB32	0.1uF
3	5	CC1,CC2,CC3,CC4,CC5	1uF/16V
4	1	CD1	22nF
5	1	CD2	0.01uF
6	4	CD3,CD4,CD5,CD6	20pF
7	1	CON1	EBI EXT. CON
8	1	CON2	EBI ADDRESS EXT. CON
9	1	CON3	I/O EXT. CON
10	1	CON4	JTAG-14
11	1	CON5	Power JACK
12	1	CON6	DSUB-9
13	1	CON7	USB A-TYPE
14	1	CON8	Mimi USB B-TYPE
15	5	C1,C2,C5,C9,C10	33uF/16V
16	9	C3,C4,C6,C7,C8,C11,C12, C13,C14	22uF/10V
17	2	JP2,JP1	15M/80M
18	2	LED2,LED1	RED_LED
19	3	LED3,LED4,LED5	GREEN_LED
20	9	LL1,LL2,LL3,LL4,LL5,LL6, LL7,LL8,LL9	FB
21	1	RP1	8P4R-10K
22	13	RP2,RP3,RP4,RP5,RP6,RP7, RP8,RP9,RP10,RP11,RP12, RP13,RP14	8P4R-22
23	1	RP15	8P4R-4.7K
24	6	R1,R3,R4,R13,R14,R15	10K
25	7	R2,R5,R7,R10,R18,R33,R34	0
26	7	R6,R25,R26,R28,R29,R30, R32	4.7K
27	2	R8,R9	220
28	4	R11,R12,R36,R37	1K
29	2	R17,R16	15K
30	1	R19	1.5K
31	2	R27,R20	22

32	4	R21,R22,R23,R24		27
33	1	R31	1M	
34	1	R35	10M	
35	2	SP1,SP2	SW PUSHBUTTON	
36	3	TP1,TP2,TP3	TEST POINT	
37	1	U1	74LS08	
38	1	U2	SP705	
39	2	U4,U3	W986416EH	
40	1	U5	W19B/L320S	
41	1	U6	AMC1117-3.3v	
42	1	U7	RT9193-1.8v	
43	1	U8	SP232ECA	
44	1	U9	AMC3526H	
45	1	U10	W90P710	
46	1	X1	15MHz Crystal	
47	1	X2	32.768KHz Crystal	

6.2 Application board

Bill of Materials February 22, 2006 10:57:50 Page1

Item	Quantity	Reference	Part
1	16	BP1,BP2,BP3,BP4,BP5,BP6, BP7,BP8,BP9,BP10,BP11, BP12,BP13,BP14,BP15,BP16	PUSH-KEY
2	2	CB2,CB1	47pF
3	12	CB3,CB6,CB29,CB30,CB31, CB32,CB33,CB34,CB35,CB37, CB38,CB39	1uF
4	42	CC1,CC2,CC3,CC4,CB4,CC5, CB5,CC6,CC7,CB7,CC8,CB8, CC9,CB9,CC10,CB10,CC11, CB11,CC12,CC13,CC14,CC15, CB19,CB36,CB40,CB41,CB42, CB43,CB44,CB48,CB49,CB50, CB51,CB52,CB53,CB54,CB55, CB56,CB57,CB58,CB59,CB60	0.1uF
5	4	CB12,CB14,CB25,CB4622pF	
6	13	CB13,CB15,CB16,CB17,CB18, CB20,CB21,CB22,CB23,CB24, CB26,CB27,CB28	1nF
7	1	CB45	10pF
8	1	CB47	0.01uF
9	2	CL2,CL1	0.1uF 2KV
10	2	CON3,CON1	EBI TEST CON
11	2	CON2,CON4	EBI EXT. CON
12	2	CON5,CON7	DB9_Male
13	1	CON6	PS/2 CON
14	1	CON8	RJ-45L CON
15	1	CON9	I/O EXT. CON
16	1	CON10	I/O TEST CON
17	1	CON11	Power CON
18	1	CT1	470uF/16V
19	2	C2,C1	33uF/10V
20	13	C3,C4,C5,C6,C7,C8,C9,C10, C11,C12,C13,C23,C24	10uF/16V
21	1	C14	10uF/50V
22	7	C15,C16,C18,C19,C20,C21, C22	4.7uF/10V
23	1	C17	2.2uF/10V
24	3	C25,C26,C27	33uF/16V
25	1	D1	RB521S-30
26	2	D3,D2	MBR0520
27	1	JP1	UTXD SEL

28	1	JP2	URXD SEL
29	1	JP3	RTS1/RXD2 SEL
30	1	JP4	CTS1/TXD2 SEL
31	1	JP5	UART/PS2_CLK SEL
32	1	JP6	UART/PS2_DAT SEL
33	1	JP8	3V/5V SEL
34	1	J1	1X2_HEADER_2.54
35	1	J2	SD/MMC SOCKET
36	1	J3	SCSLOT
37	1	J4	SIM Card Slot
38	1	J5	MICROPHONE
39	1	J6	PHONEJACK STEREO SW
40	1	J7	PWM Header
41	1	J8	COM25T2171T
42	1	J9	BACKLIGH
43	11	LED1,LED2,LED5,LED8,LED9, LED10,LED11,LED12,LED13, LED14,LED15	LED_R
44	4	LED3,LED4,LED6,LED7LED_G	
45	16	LL1,LL2,LL3,LL4,LL5,LL6, LL7,LL8,LL9,LL10,LL11, LL12,LL13,LL14,LL15,LL16	FB
46	2	L1,L2	6.8uH
47	1	OSC1	50MHz
48	2	Q1,Q2	2N3904
49	2	Q4,Q3	SI2301SD
50	7	RP1,RP8,RP13,RP14,RP15, RP20,RP21	8P4R-10K
51	10	RP2,RP3,RP4,RP5,RP7,RP10, RP11,RP12,RP16,RP17	8P4R-22
52	1	RP6	8P4R-4.7K
53	1	RP9	8P4R-0
54	2	RP19,RP18	8P4R-220
55	1	RR1	0-20K
56	11	R1,R2,R14,R15,R16,R17, R39,R44,R45,R46,R47	4.7K
57	4	R3,R6,R7,R38	1K
58	3	R4,R5,R29	2.2K
59	7	R8,R9,R73,R74,R75,R78, R79	220
60	2	R11,R10	3.3k
61	8	R12,R13,R28,R49,R50,R65, R76,R77	22
62	1	R18	33
63	13	R19,R20,R21,R22,R23,R24, R25,R26,R27,R69,R70,R71, R72	10K
64	12	R30,R32,R33,R41,R42,R43, R51,R55,R57,R58,R68,R81	0
65	1	R31	22K
66	2	R37,R34	100

67	2	R36,R35	220K
68	1	R40	100K
69	1	R48	560K
70	1	R52	10
71	1	R53	3.3
72	4	R54,R56,R59,R60	50R 1%
73	4	R61,R62,R63,R64	75R 1%
74	1	R66	6.8K
75	1	R67	1.5K
76	1	SP1	Vol-Mute
77	1	SP2	Vol-Down
78	1	SP3	Vol-Up
79	1	SP4	POWER SW
80	5	SW1,SW2,SW3,SW9,SW10	SW 1X4
81	4	SW4,SW6,SW11,SW13	SW 1X8
82	4	SW5,SW7,SW12,SW14	SW 1X2
83	1	SW8	SW 1X5
84	3	U1,U2,U7	MAX202C
85	1	U3	24LC64
86	1	U4	W25P10/20/40
87	1	U5	LTC1555L
88	1	U6	ALC203
89	2	U8,U9	PC113
90	1	U10	BOTHHAND TS6121C
91	1	U11	DM9161
92	1	U12	AMC1117-3.3v
93	1	U13	74F373
94	1	U14	74LV1G04
95	1	X1	24.576MHz Crystal

6.3 AUO TFT panel board

Bill Of Materials May 2,2006 17:58:50 Page1

Item	Quantity	Reference	Part
1	2	CB1,CB2	0.1uF
2	2	CB3,CB4	1uF
3	1	CON1	I/O EXT. CON
4	11	C1,C2,C3,C4,C5,C6,C7,C8, C9,C11,C12	4.7uF/10V
5	3	C10,C13,C14	33uF/16V
6	1	C15	10uF/16V
7	1	D1	MBR0520
8	1	J1	AUO 3.0" TFT A030DL01
9	1	L1	6.8uH
10	2	L3,L2	FB
11	4	RP1,RP2,RP3,RP4	8P4R-22
12	1	R1	22
13	1	R2	3.3
14	2	R3,R4	0
15	1	U1	RT9164A-3.3v
16	1	U2	PC113